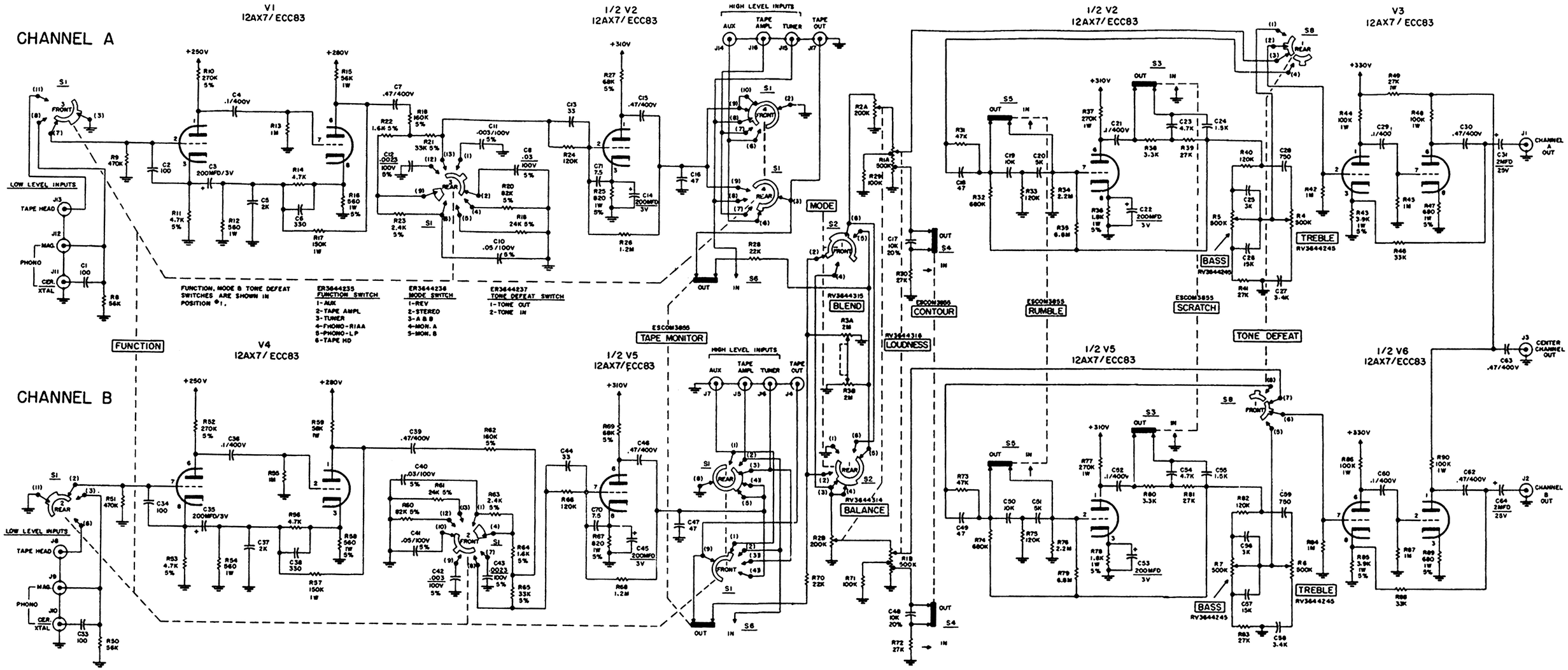

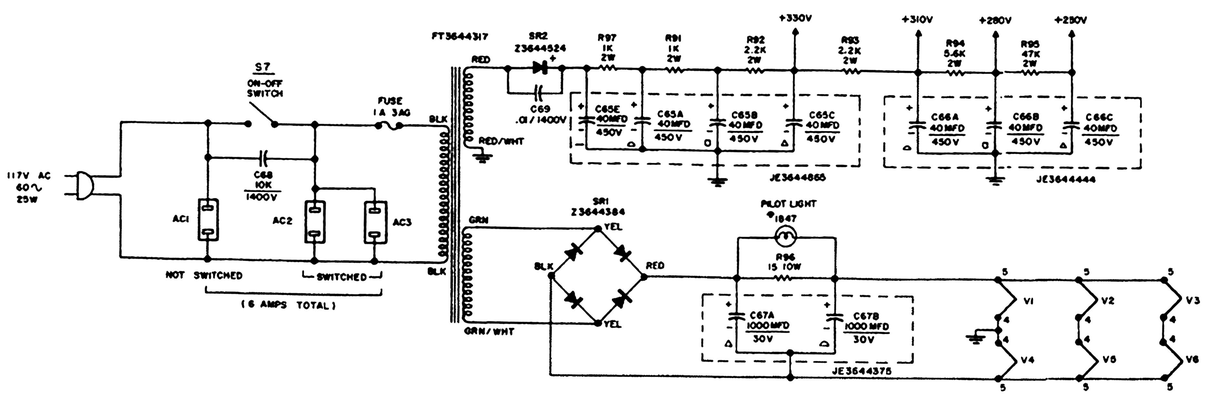

VOLTAGE READINGS

LINE VOLTAGE - 117V AC (READINGS TAKEN WITH 20,000 OHMS PER VOLT METER). FUNCTION SWITCH IN TAPE POSITION, LOUDNESS CONTROL IN MAXIMUM CLOCKWISE POSITION, ALL OTHER CONTROLS AND SWITCHES IN MAXIMUM COUNTER-CLOCKWISE POSITION.

READINGS MAY VARY ± 20%

ITEM	TUBE	PIN 1	PIN 2	PIN 3	PIN 4	PIN 5	PIN 6	PIN 7	PIN 8	PIN 9
V1	12AX7	160V	0V	1.4V	0V	12V	155V	0V	.7V	—
V2	12AX7	200V	0V	1.4V	Δ	12V	110V	0V	1.0V	—
V3	12AX7	265V	0V	2.4V	Δ	12V	130V	0V	.75V	—
V4	12AX7	155V	0V	.7V	0V	-12V	160V	0V	1.4V	—
V5	12AX7	110V	0V	1.0V	Δ	-12V	200V	0V	1.4V	—
V6	12AX7	130V	0V	.75V	Δ	-12V	265V	0V	2.4V	—

(Δ) READINGS MARKED WITH TRIANGLE DEPEND UPON THE FILAMENT RESISTANCE OF THE TUBES AND MAY VARY BETWEEN +.5V AND -.5V.

ALL VOLTAGES ARE DC UNLESS OTHERWISE NOTED.

RESISTANCE READINGS

CAUTION - DISCONNECT AC LINE AND COMPLETELY DISCHARGE FILTER CAPACITORS BEFORE TAKING READINGS. FUNCTION SWITCH IN TAPE POSITION, LOUDNESS CONTROL IN MAXIMUM CLOCKWISE POSITION, ALL OTHER CONTROLS AND SWITCHES IN MAXIMUM COUNTER-CLOCKWISE POSITION.

READINGS MAY VARY ± 20%.

ITEM	TUBE	PIN 1	PIN 2	PIN 3	PIN 4	PIN 5	PIN 6	PIN 7	PIN 8	PIN 9
V1	12AX7	*330K	470K	4.7K	0	**10Ω	*60K	1M	560Ω	—
V2	12AX7	*75K	1.5M	820Ω	**13Ω	**10Ω	*280K	700K	1.8K	—
V3	12AX7	*100K	100K	3.9K	**13Ω	**10Ω	*130K	1M	680Ω	—
V4	12AX7	*60K	1M	560Ω	0	**10Ω	*330K	470K	4.7K	—
V5	12AX7	*280K	700K	1.8K	**13Ω	**10Ω	*75K	1.5M	820Ω	—
V6	12AX7	*130K	1M	680Ω	**13Ω	**10Ω	*100K	100K	3.9K	—

(*) READINGS MARKED WITH AN ASTERISK ARE MEASURED TO POSITIVE TERMINAL OF SELENIUM RECTIFIER (SR2).

(**) READINGS MARKED WITH DOUBLE ASTERISK DEPEND UPON THE FILAMENT RESISTANCE OF THE TUBE & MAY VARY ± 50%.

NOTES:

UNLESS OTHERWISE SPECIFIED -

1 - ALL RESISTANCE VALUES IN OHMS ± 10%.
2 - ALL RESISTORS 1/2 WATT.
3 - ALL CAPACITORS WITH DECIMAL VALUES IN MFD.
4 - ALL CAPACITORS WITHOUT DECIMAL VALUES IN MMF.

CITATION IV

S39I
S3644720-C