KENWOOD

HI/FI STEREO COMPONENTS

SERVICE MANUAL

KR-3010
(KR-3010L)

An item of adjustment is written in three languages — English, French and German.

Un article sur réglages est écrit en trois langues, Anglais, Français et Allemand.

Ein Artikel der Abgleich wird auf drei Sprachen, Englische, Französisch und Deutsch geschrieben.

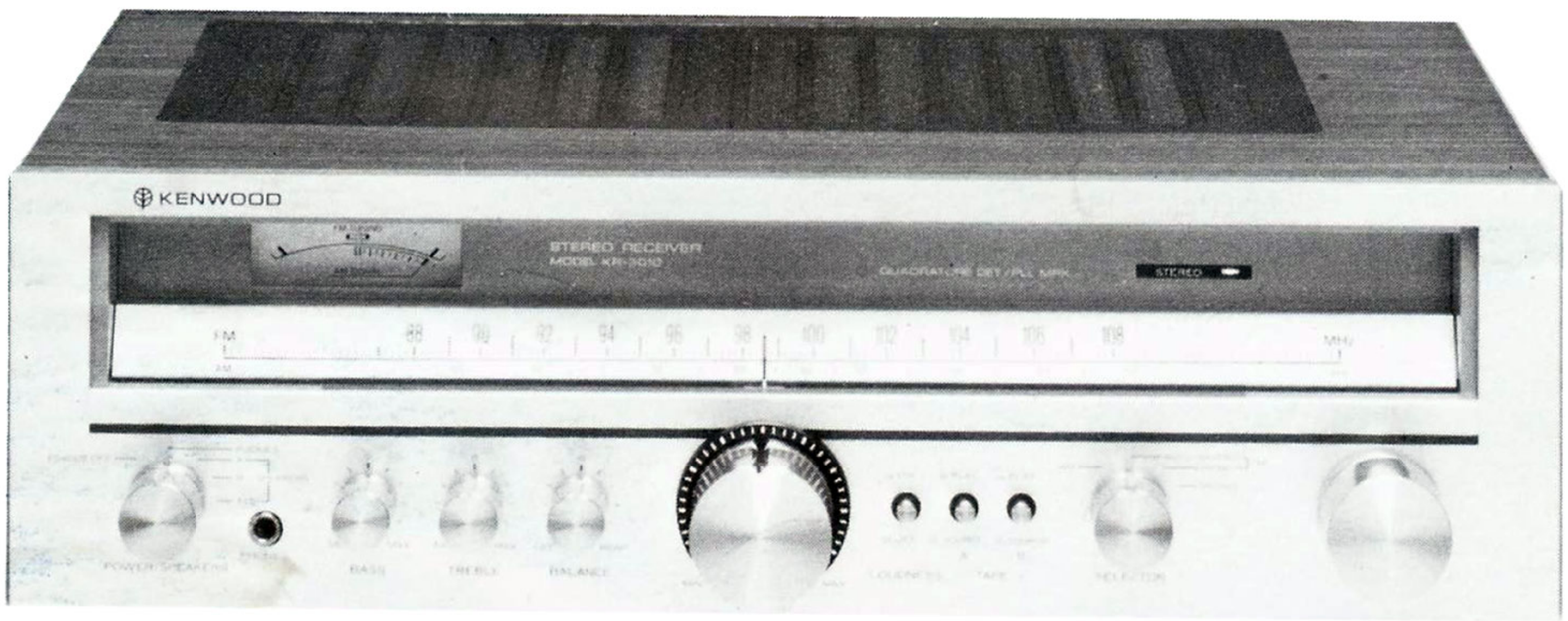

STEREO RECEIVER

www.hifiengine.com

CONTENTS

EXTERNAL VIEW 3
INTERNAL VIEW 4
DIAL CORD STRINGING 5
DISASSEMBLY FOR REPAIR 5
EXPLODED VIEW 6
BLOCK AND LEVEL DIAGRAM 7
ADJUSTMENT/RÉGLAGES/ABGLEICH 8
PC BOARD 11
SCHEMATIC DIAGRAM (KR-3010) 13
SCHEMATIC DIAGRAM (KR-3010L) 14
PARTS LIST 15
SEMICONDUCTOR SUBSTITUTIONS 16

Note:

This manual is for the KR-3010 and KR-3010L. Component and circuitry are subject to modification to insure best operation under differing local conditions. This manual is based on, the U.S. (K) standard for the KR-3010, the Europe & Scandinavia (E) Standard for the KR-3010L, and provides information on regional circuit modification through use of alternate schematic diagrams, and information on regional component variation through use of parts list.

Region	Code
U.S.A.	K
Canada	P
PX	U
Australia	X
Europe & Scandinavia	E
England	T
South Africa	S
Other Areas	M

There is no plan for producing units of U and S types.

www.hifiengine.com

EXTERNAL VIEW

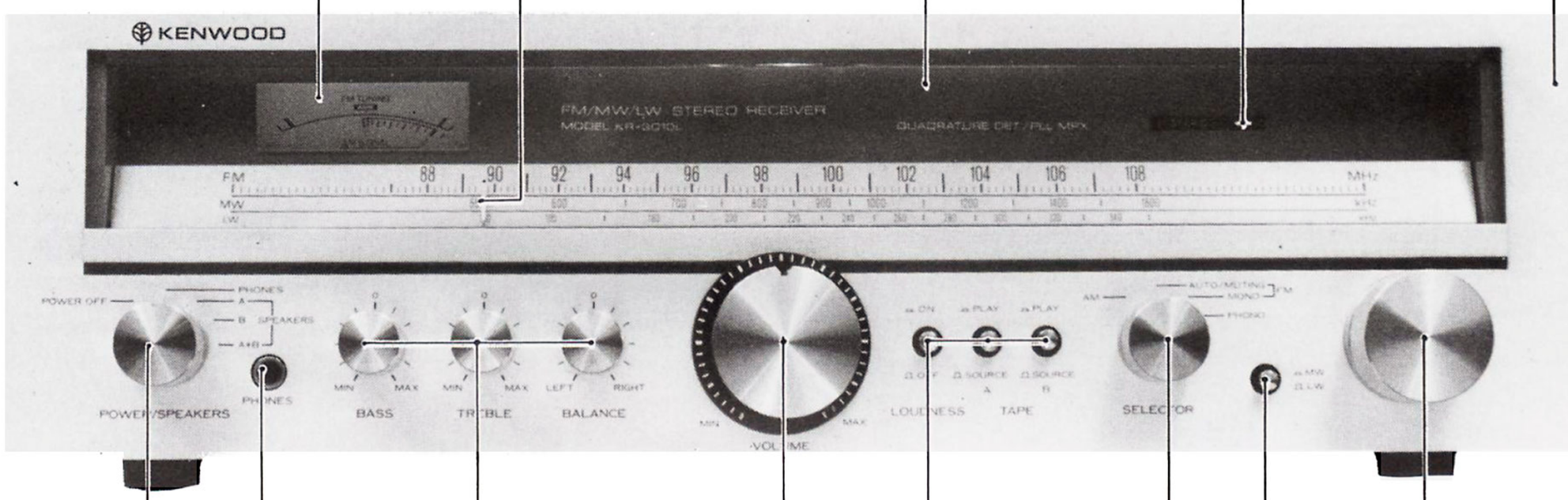

Phone jack
(E11-0060-05)

Knob
(K29-0309-04)

Knob
(K29-0310-04)

Knob
(K23-0327-04)

Knob
(K29-0310-04)

Knob
(K29-0311-04)

Knob
(K27-0096-04)

Knob ☆
(K27-0096-04)

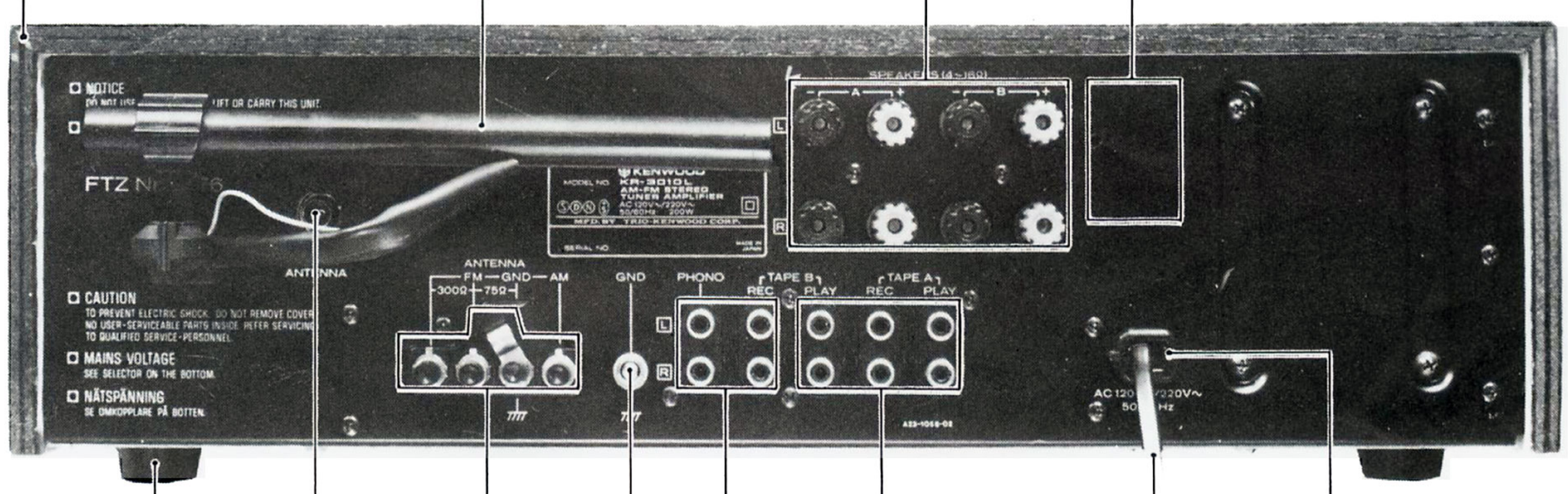

Wooden cabinet*
(A03-)

AM Bar antenna*
(T90-)

Terminal board
(E20-0813-05)

AC outlet*
(E03-)

Foot
(J02-0103-05)

Receptacle*
(E04-)

Terminal board
(E20-0439-05)

Dressed screw (GND)
(N08-0128-35)

Phono jack
(E13-0423-05)

Phono jack
(E13-0612-05)

Power cord*
(E30-)

Power cord bushing*
(J41-, J42-)

* Refer to parts list.

☆ KR-3010L only

www.hifiengine.com

INTERNAL VIEW

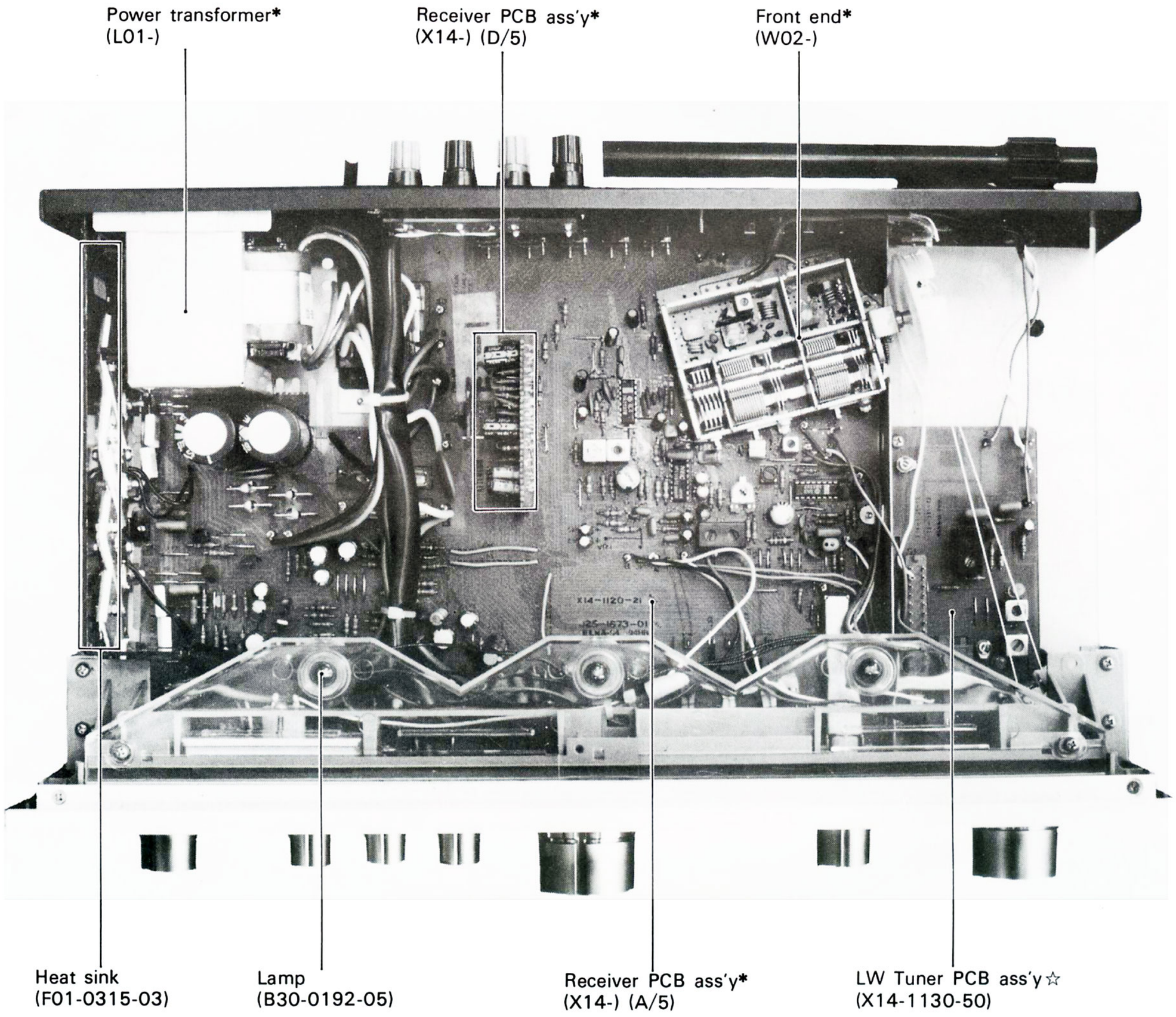

* Refer to parts list.

☆ KR-3010 only

www.hifiengine.com

DIAL CORD STRINGING/DISASSEMBLY FOR REPAIR

DIAL CORD STRINGING

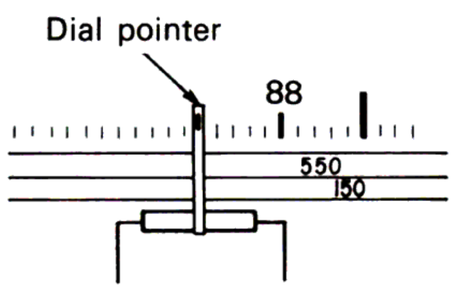

Fig. 3 Dial pointer mounting

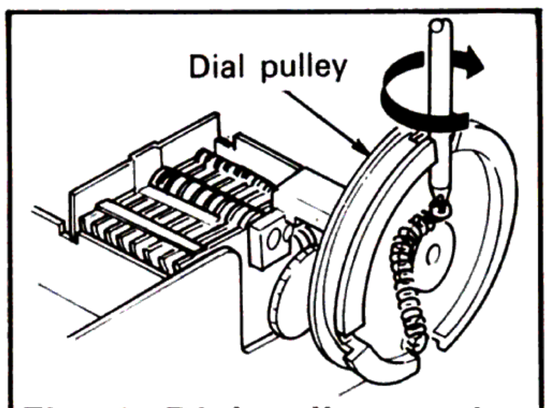

Fig. 1 Dial pulley setting

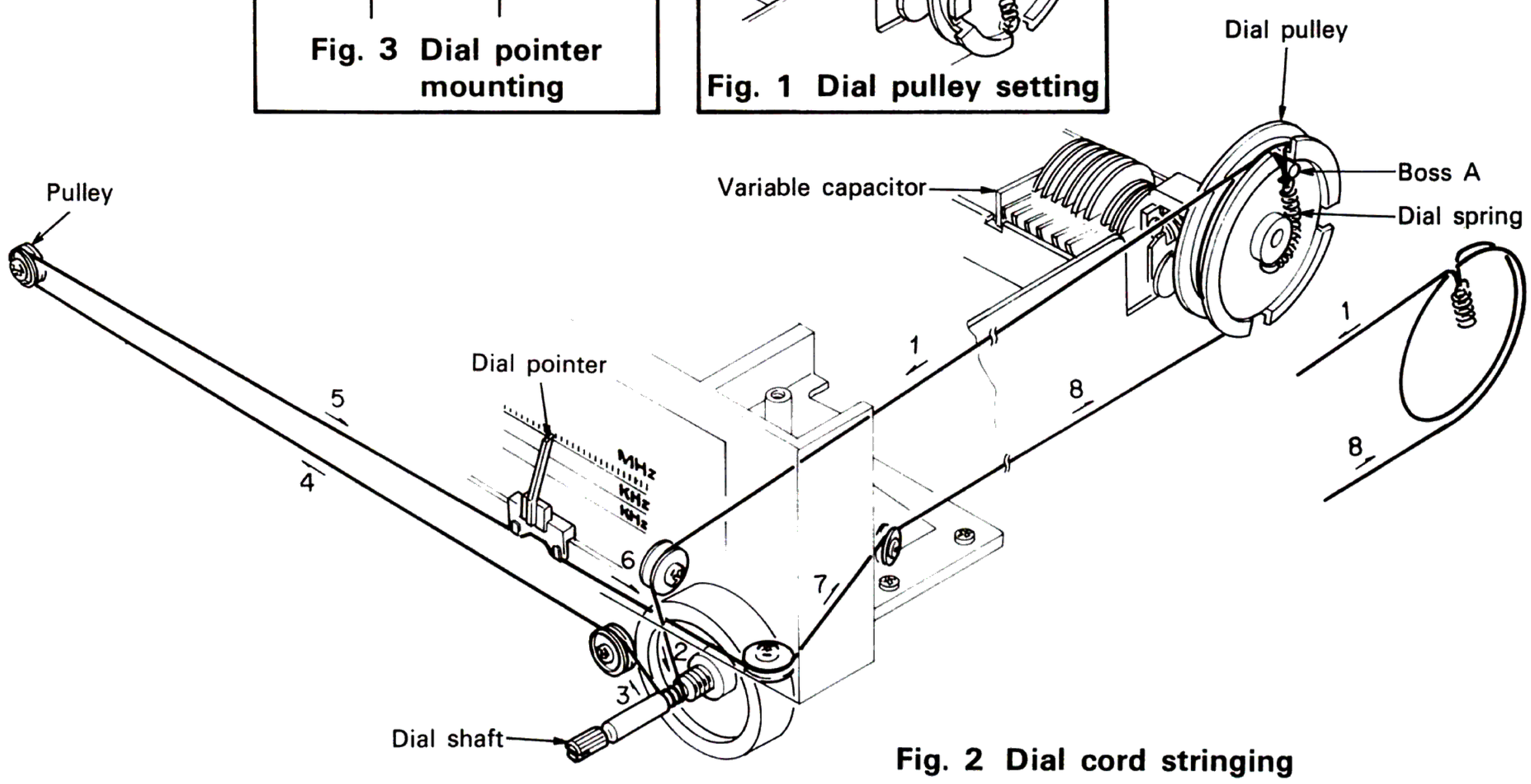

Fig. 2 Dial cord stringing

1. Set the dial pulley as shown in Fig. 1.
2. Fully open the variable capacitor.
3. Tie the dial cord to the dial spring, and hook it on the boss A.
4. Dress the dial cord in the direction of "1" to "2".
5. Wind the dial cord three turns around the dial shaft starting from its upper side.
6. Dress the dial cord in the direction of "3" through "8".
7. Wind the dial cord two and a half turns around the dial pulley starting from its lower side.
8. Tie the end of the dial cord to the dial spring.
9. Remove the dial spring from the boss A.
10. Fully close the variable capacitor, and then mount the dial pointer as shown in Fig. 3.

DISASSEMBLY FOR REPAIR

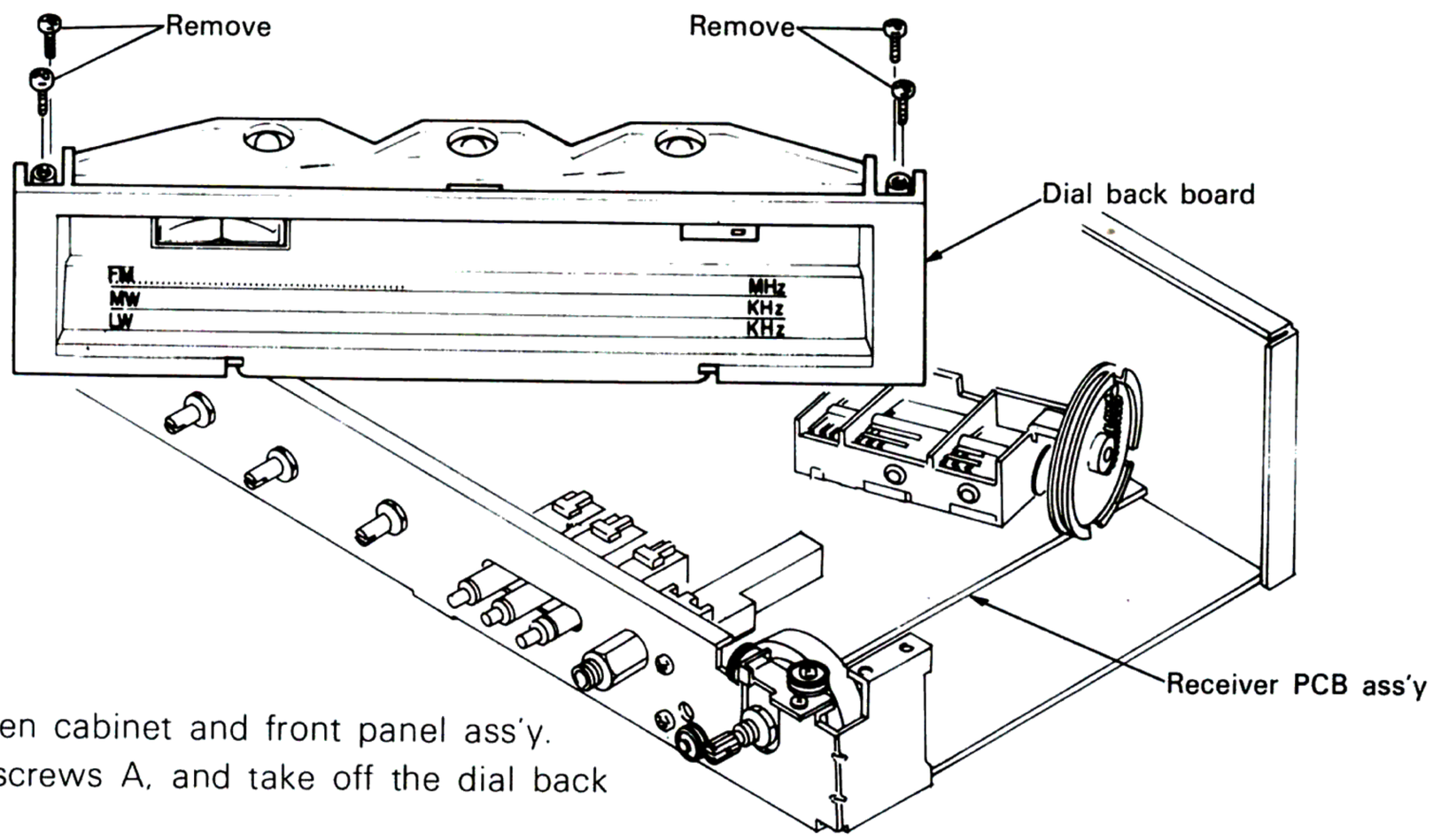

1. Remove the wooden cabinet and front panel ass'y.
2. Remove the four screws A, and take off the dial back board.

Then you can check the Receiver PCB ass'y easily.

www.hifiengine.com

EXPLODED VIEW

See parts numbers on page 15.

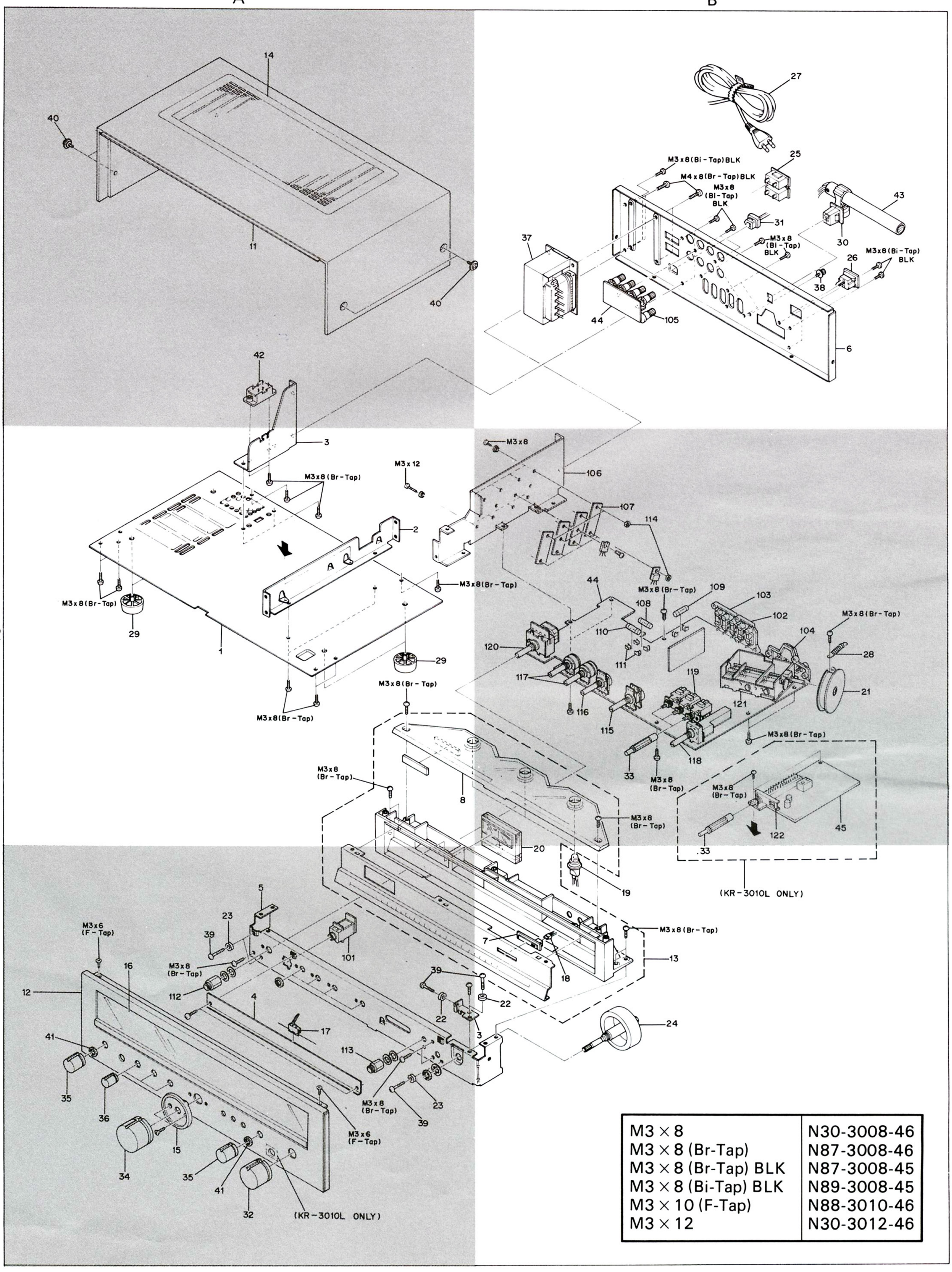

M3 × 8	N30-3008-46
M3 × 8 (Br-Tap)	N87-3008-46
M3 × 8 (Br-Tap) BLK	N87-3008-45
M3 × 8 (Bi-Tap) BLK	N89-3008-45
M3 × 10 (F-Tap)	N88-3010-46
M3 × 12	N30-3012-46

BLOCK AND LEVEL DIAGRAM

BLOCK DIAGRAM

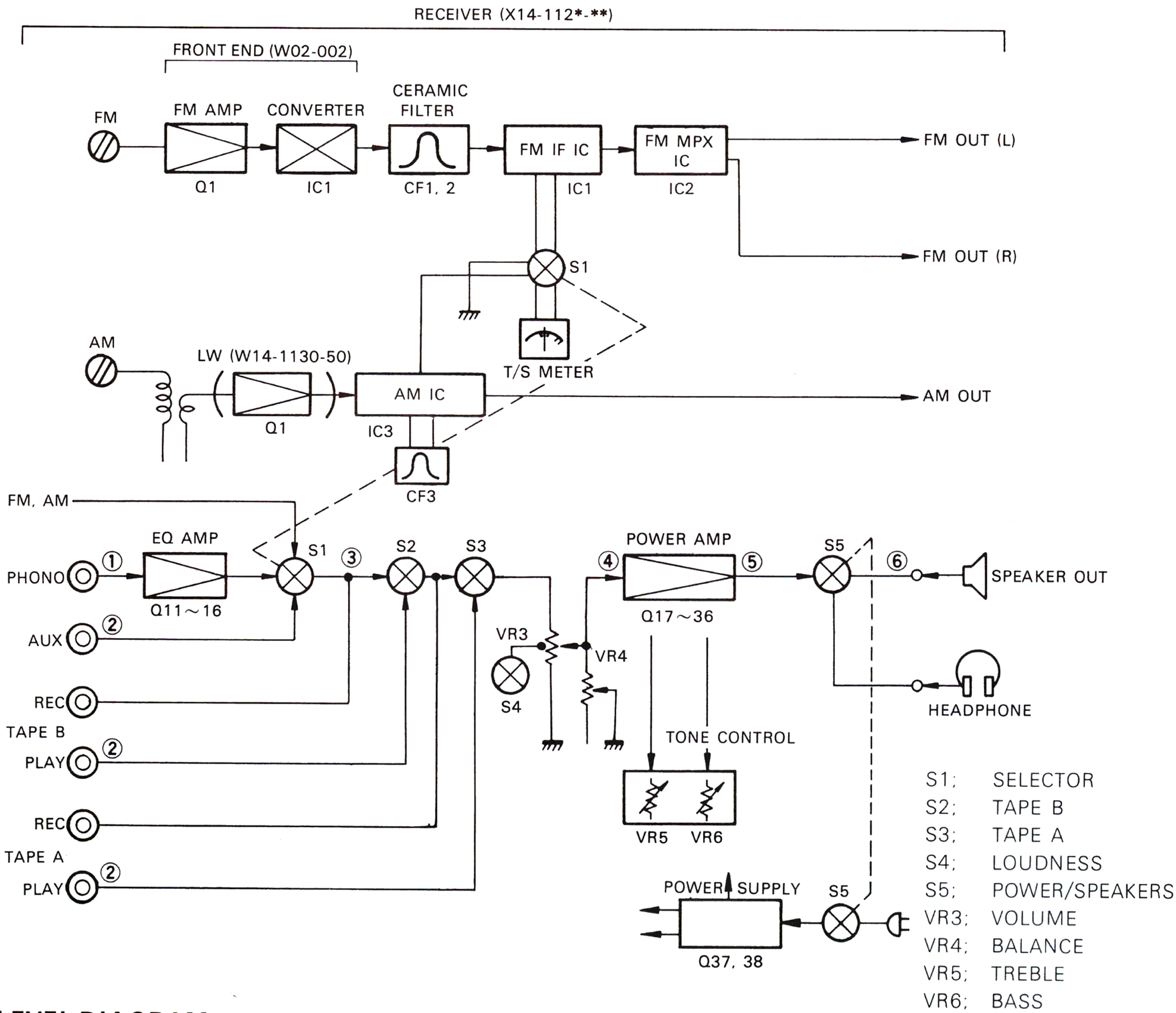

LEVEL DIAGRAM

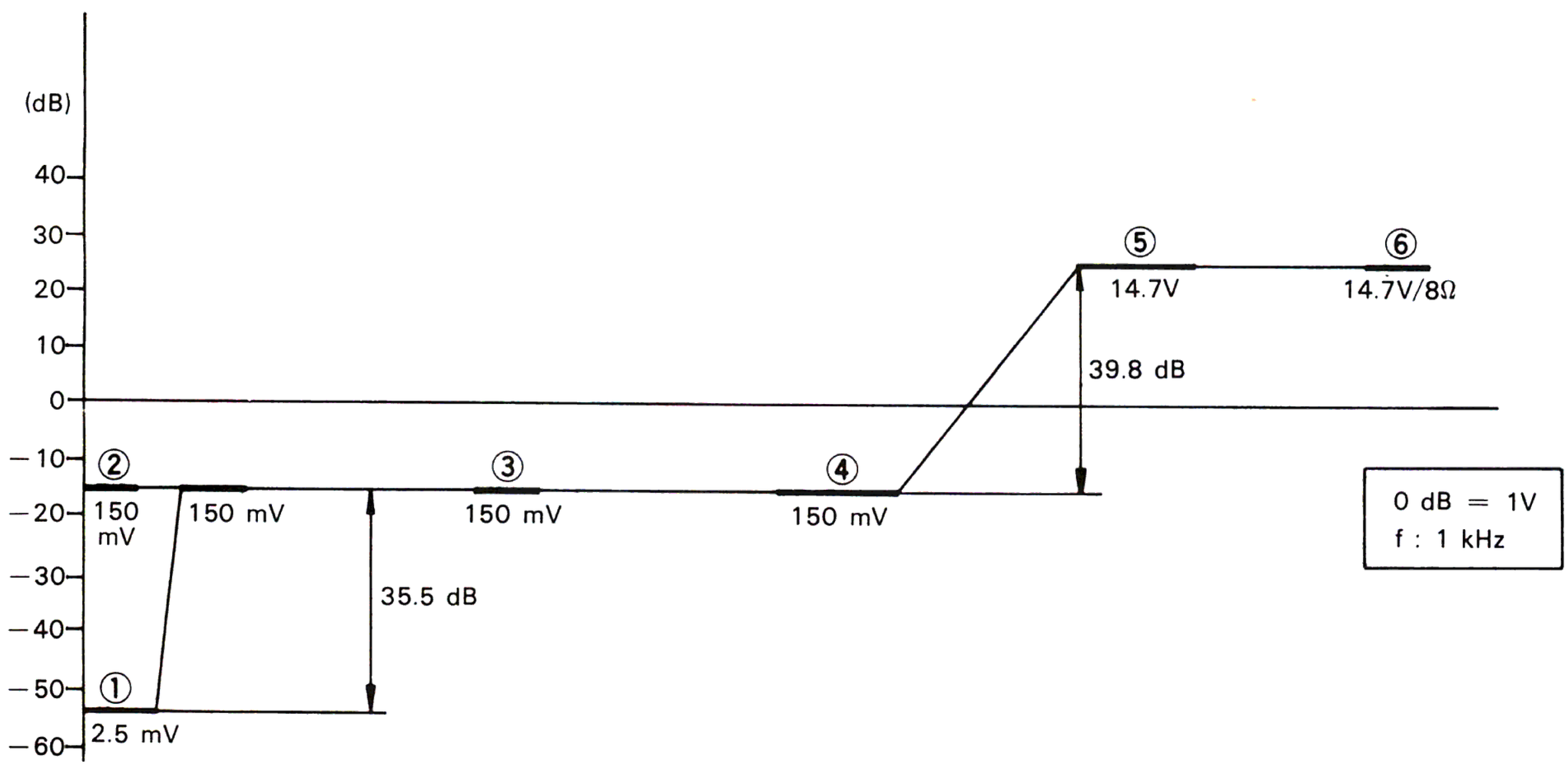

www.hifiengine.com

ADJUSTMENT

NO.	ALIGNMENT	TEST EQUIPMENTS		RECEIVER SETTING	OUTPUT INDICATOR	ADJUSTMENT POINTS	REMARKS
		CONNECTION	SETTING				
FM							
①	**DISCRIMI-NATOR (1)**	Ⓐ	95 MHz 1 kHz, ±75 kHz Dev	FM-MONO 95 MHz	Ⓑ	—	*1
②	**DISCRIMI-NATOR (2)**	ditto	95 MHz 1 kHz, ±75 kHz Dev 60 dB (Receiver input)	FM-AUTO/MUTE 95 MHz	T/S meter	L1	T meter pointer to be center.
③	**DISCRIMI-NATOR (3)**	ditto	ditto	ditto	Ⓑ	L2	Minimum distortion
Repeat alignments "1 ~ 3" several times.							
④	**VCO**	Ⓐ	95 MHz 0 Dev 60 dB (Receiver input)	FM-AUTO/MUTE 95 MHz	Frequency counter to the crosspoint of R19 and VR2	VR2	76 kHz ±200 Hz
⑤	**IFT**	Ⓒ	95 MHz *2 1 kHz, ±68.25 kHz Dev SELECTOR: L+R 60 dB (Receiver input)	ditto	ditto	T1 (FRONT END)	Minimum distortion
AM (KR-3010)							
(1)	**IFT**	Ⓓ	1,000 kHz 400 Hz, 30% Mod	AM 1,000 Hz	Ⓑ	L4	Maximum deflection
(2)	**TRACKING (1)**	ditto	600 kHz 400 Hz, 30% Mod	AM 600 kHz	ditto	L3 Bar antenna	ditto
(3)	**TRACKING (2)**	ditto	1,400 kHz 400 Hz, 30% Mod	AM 1,400 kHz	ditto	TC1, TC2 (FRONT END)	ditto
AM (KR-3010L)							
(1)	**IFT**	Ⓓ	1,000 kHz 400 Hz, 30% Mod	AM-MW 1,000 Hz	Ⓑ	L4	Maximum deflection
(2)	**MW TRACK-ING (1)**	ditto	600 kHz 400 Hz, 30% Mod	AM-MW 600 kHz	ditto	Bar antenna (A) L2 (LW TUNER)	ditto
(3)	**MW TRACK-ING (2)**	ditto	1,400 kHz 400 Hz, 30% Mod	AM-MW 1,400 kHz	ditto	TC1, TC2 (FRONT END)	ditto
(4)	**LW TRACK-ING (1)**	ditto	160 kHz 400 Hz, 30% Mod	AM-LW 160 kHz	ditto	Bar antenna (B) L3 (LW TUNER)	ditto
(5)	**LW TRACK-ING (2)**	ditto	340 kHz 400 Hz, 30% Mod	AM-LW 340 kHz	ditto	TC1, TC2 (LW TUNER)	ditto
AUDIO							
I	**BIAS CURRENT**	—	—	Volume to minimum position	Ⓔ	R109 (R110)	20 mV

*** 1**
Adjust the tuning knob so that the same amount of noise is observed at the top and bottom of the output waveform with a weak signal

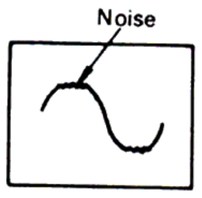

*** 2**
Set deviation to ±68.25 kHz with selector in L+R position.
Set deviation of pilot signal to 6.75 kHz (9%).

*** 3 FM front end**
The FM front end section is completely adjusted in the factory and further adjustment is not necessary. When the transistor and/or FET are replaced, perform the following adjustment.

(1) Set FM-SG to 108 MHz, 1 kHz Mod, ±75 kHz Dev and connect it to the antenna terminal of the receiver.
(2) Set the dial pointer at 108 MHz.
(3) Adjust TC3 so that T meter gives a mid-scale reading.
(4) Adjust TCA and TCR so that S meter deflects maximum.

When the FM front end section cannot be repaired by replacing semiconductors and taking steps in "(1)~(4)", replace the front end PCB ass'y (W02-0023-05).

www.hifiengine.com

RÉGLAGES

No	ALIGNMENT	APPAREILLAGE		RÉGLAGE DU AMPLI-TUNER	INDICATEUR DE SORTIE	POINTS DE RÉGLAGES	REMARQUES
		RACCORDE-MENT	RÉGLAGE				
SECTION MF							
①	**DISCRIMI-NATEUR (1)**	Ⓐ	95 MHz 1 kHz (MOD) ±75 kHz (DÉV)	FM-MONO 95 MHz	Ⓑ	—	*1
②	**DISCRIMI-NATEUR (2)**	idem	95 MHz 1 kHz (MOD) ±75 kHz (DÉV) 60 dB (Niveau d'entrée du ampli-tuner)	FM-AUTO/MUTE 95 MHz	indicateur à zéro central	L1	Aiguille de l'indicateur à zéro central en position centrale.
③	**DISCRIMI-ANTEUR (3)**	idem	idem	idem	Ⓑ	L2	Distorsion minimale
Repéter les points 1 ~ 3 plusieurs fois.							
④	**OSCILA-TEUR 76 kHz**	Ⓐ	95 MHz 0 (DEV) 60 dB	FM-AUTO/MUTE 95 MHz	Relier le compteur de frequence au plot R19 et VR2	VR2	76 kHz ±200 Hz
⑤	**TFI**	Ⓒ	95 MHz *2 1 kHz (MOD) ±68,25 kHz (DEV) L+R (SELECTION) 60 dB	idem	idem	T1 (PARTIE FRONTALE)	Distorsion minimale
SECTION MA (KA-3010)							
(1)	**TFI**	Ⓓ	1.000 kHz 400 Hz, 30% (MOD)	AM 1.000 kHz	Ⓑ	L4	Déviation maximale
(2)	**ALIGNMENT**	idem	600 kHz 400 Hz, 30% (MOD)	AM 600 kHz	idem	Antenna ferrite MA, L3	idem
(3)	**ALIGNMENT**	idem	1.400 kHz 400 Hz, 30% (MOD)	AM 1.400 kHz	idem	TC1, TC2 (PARTIE FRONTALE)	idem
SECTION MA (KR-3010L)							
(1)	**TFI**	Ⓓ	1.000 kHz 400 Hz, 30% (MOD)	AM-MW 1.000 kHz	Ⓑ	L4	Déviation maximale
(2)	**ALIGNMENT**	idem	600 kHz 400 Hz, 30% (MOD)	AM-MW 600 kHz	idem	Antenna ferrite MA (A), L2 (LW-TUNER)	idem
(3)	**ALIGNMENT**	idem	1.400 kHz 400 Hz, 30% (MOD)	AM-MW 1-400 kHz	idem	TC1, TC2 (PARTIE FRONTALE)	idem
(4)	**ALIGNMENT**	idem	160 kHz 400 Hz, 30% (MOD)	AM-LW 160 kHz	idem	Antenna ferrite MA (B), L3 (LW-TUNER)	idem
(5)	**ALIGNMENT**	idem	340 kHz 400 Hz, 30% (MOD)	AM-LW 340 kHz	idem	TC1, TC2 (LW-TUNER)	idem
SECTION AMPLI							
I	**COURANT DE POLARISATION**	—	—	VOLUME: minimale	Ⓔ	R109 (R110)	20 mV

*** 1**

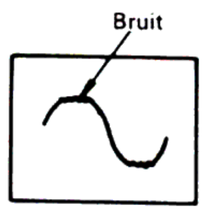

Ajuster le bouton d'accord de façon que la même quantité du bruit puisse être observé au sommet et en bas de la forme d'onde de sortie sous des conditions d'alimentation de signal faible.

*** 2**

Régler la déviation à ±68,25 kHz avec le sélecteur en position L+R (gauche+droite). Régler la déviation du signal pilote à 6,75 kHz (9%).

*** 3 Partie frontale FM**

La partie frontale FM a été parfaitement réglée en usine et aucun réglage supplémentaire n'est requis.
Si l'on remplace le transistor et/ou FET, il convient d'effectuer le réglage suivant:

(1) Régler FM-SG sur 108 MHz, 1 kHz Mod, 75 kHz Dev et le connecter à la borne d'antenne du ampli-tuner.
(2) Régler l'aiguille du cadran à 108 MHz.
(3) Ajuster TC3 de façon que l'indicateur à zéro central donne une lecture à mi-échelle.
(4) Ajuster TCA et TCR de façon que l'indicateur de champ dévie au maximum.

Si la partie frontale FM ne peut pas être réparée en remplaçant les semi-conducteurs et en procédant suivant les indications dans (1)~(4), remplacer l'assemblage PCB de la partie frontale (W02-0023-05).

www.hifiengine.com

ABGLEICH

NR.	ABGLEICH	PRÜFEINRICHTUNG		STEUERGERÄT EINSTELLUNG	AUSGANGS-ANZEIGE	EINSTELL-PUNKT	BEMER-KUNGEN
		ANSCHLÜSSE	EINSTELLUNG				
UKW-EMPFANGSABTEILUNG							
①	DISKRIMI-NATOR (1)	Ⓐ	95 MHz 1 kHz, ±75 kHz Hub	FM-MONO 95 MHz	Ⓑ	—	*1
②	DISKRIMI-NATOR (2)	dito	95 MHz 1 kHz, ±75 kHz Hub 60 dB (Steuergerät-Eingangspegel)	FM-AUTO/MUTE 95 MHz	Kanalmitten-Anzeiger	L1	Den zeiger des Kanlimitten-Anzeiger mittig einstellen.
③	DISKRIMI-NATOR (3)	dito	dito	dito	Ⓑ	L2	Minimaler klirrfaktor
Abstimmungen "1 bis 3" mehrere Male wiederholen.							
④	SPANNUNGS-GEREGELTER OSZILLATOR	Ⓐ	95 MHz 0 Hub 60 dB	FM-AUTO/MUTE 95 MHz	Frequenzzähler zum Kreuzungs-Punkt von R19 und VR2	VR2	76 kHz ±200 Hz
⑤	ZF-T	Ⓒ	95 MHz *2 1 kHz, ±68,25 kHz Hub Wähler: L+R 60 dB	dito	dito	T1 (FRONTENDE)	Minimaler Klirrfaktor
MW-EMPFANGSABTEILUNG (KR-3010)							
(1)	ZF-T	Ⓓ	1.000 kHz 400 Hz, 30% Mod	AM 1.000 kHz	Ⓑ	L4	Maximaler Ausschlag
(2)	EMPFANGS-BEREICH (1)	dito	600 kHz 400 Hz, 30% Mod	AM 600 kHz	dito	L3, MW-Ferritantenna	dito
(3)	EMPFANGS-BEREICH (2)	dito	1.400 kHz 400 Hz, 30% Mod	AM 1.400 kHz	dito	TC1, TC2 (FRONTENDE)	dito
MW, LW-EMPFANGSABTEILUNG (KR-3010L)							
(1)	ZF-T	Ⓓ	1.000 kHz 400 Hz, 30% Mod	AM-MW 1.000 kHz	Ⓑ	L4	Maximaler Ausschlag
(2)	MW-EMPFANGS-BEREICH (1)	dito	600 kHz	AM-MW	dito	MW-Ferrit-antenna (A), L2 (LW TUNER)	dito
(3)	MW-EMPFANGS-BEREICH (2)	dito	1.400 kHz 400 Hz, 30% Mod	AM-MW 1.400 kHz	dito	TC1, TC2 (FRONTENDE)	dito
(4)	LW-EMPFANGS-BEREICH (1)	dito	160 kHz 400 Hz, 30% Mod	AM-LW 160 kHz	dito	MW-Ferrit-antenna (B), L3 (LW TUNER)	dito
(5)	LW-EMPFANGS-BEREICH (2)	dito	340 kHz 400 Hz, 30% Mod	AM-LW 340 kHz	dito	TC1, TC2 (LW TUNER)	dito
VERSTÄRKER							
I	LEERLAUF-STROM	—	—	VOLUME ZU Stellung "∞"	Ⓔ	R109 (R110)	20 mV

*** 1**
Den Abstimmknopf so eintellen, daß an der oberen und unteren Grenze der Auspangswellenform bei schwachem Signal desselbe Geräusch auftritt.

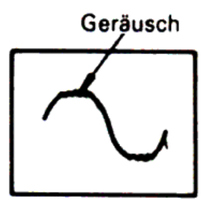

*** 2**
Hub mit dem Wahlschalter auf L+R auf 68,25 kHz einstellen. Hub des Kontrollsignals auf 6,75 kHz (9%) einstellen.

*** 3 UKW-Frontende**
Das UKW-Frontende wird bereits im Werk vollständig eingestellt. Weitere Einstellung ist daher nicht nötig.
Beim Auswechseln des Transistors und/oder des FETs die Einstellung wie folgt vornehmen.

(1) Den UKW-Signalgenerator auf 108 MHz, 1 kHz Modulation und ±75 kHz Hub einstellen und mit der Antennenklemme des steuergeräts verbinden.
(2) Den Skalenzeiger auf 108 MHz stellen.
(3) TC3 so einstellen, daß der Kanalmitten-anzeiger in der Mitte ausschlägt.
(4) TCA und TCR so einstellen, daß das Feldstärkeinstrument das Maximum anzeigt.

Wenn das UKW-Frontende durch Auswechseln der Halbleiter und/oder durch in Abschnitt "1~4" genannten Schritte nicht repariert werden kann, ist die Leiterplatte (W02-0023-05) des Frontendes auszwechseln.

www.hifiengine.com

ADJUSTMENT/RÉGLAGES/ABGLEICH

TEST INSTRUMENTS	APPAREILLAGE	PRÜFINSTRUMENTE	
Oscilloscope	Oscilloscope	Oszilloskop	SCOPE
AM signal generator	Générateur MA	MW-Signalgenerator	AM-SG
FM signal generator	Générateur MF	UKW-Signalgenerator	FM-SG
Audio generator	Générateur audio fréquences	NF-Signalgenerator	AG
AC voltmeter	Voltmètre CA	Wechselspannungsmesser	
FM multiplex generator	Générateur multiplex stéréo	UKW-Multiplexgenerator	FM-MPX
Frequency counter	Fréquencemètre	Frequenzzähler	
DC voltmeter	Voltmètre CC	Gleichspannungsmesser	
Distortion meter	Distorsiomètre	Klirrfaktormesser	
Dummy antenna	Antenne fictive	Antennennachbildung	

I BIAS CURRENT

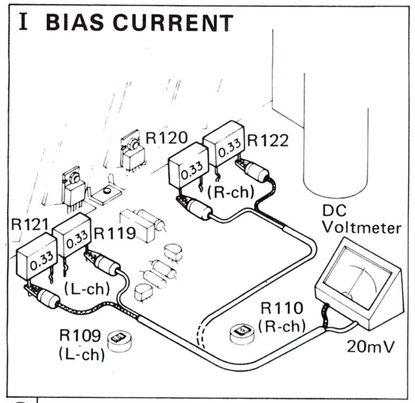

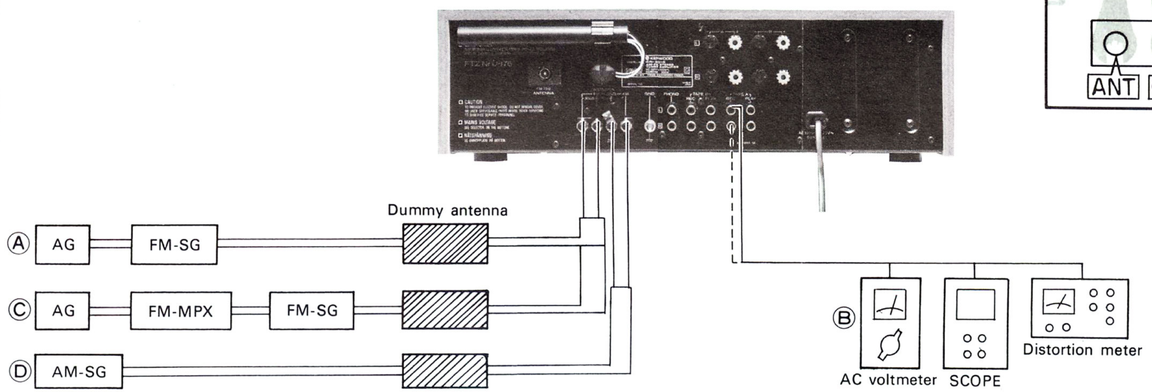

Ⓔ

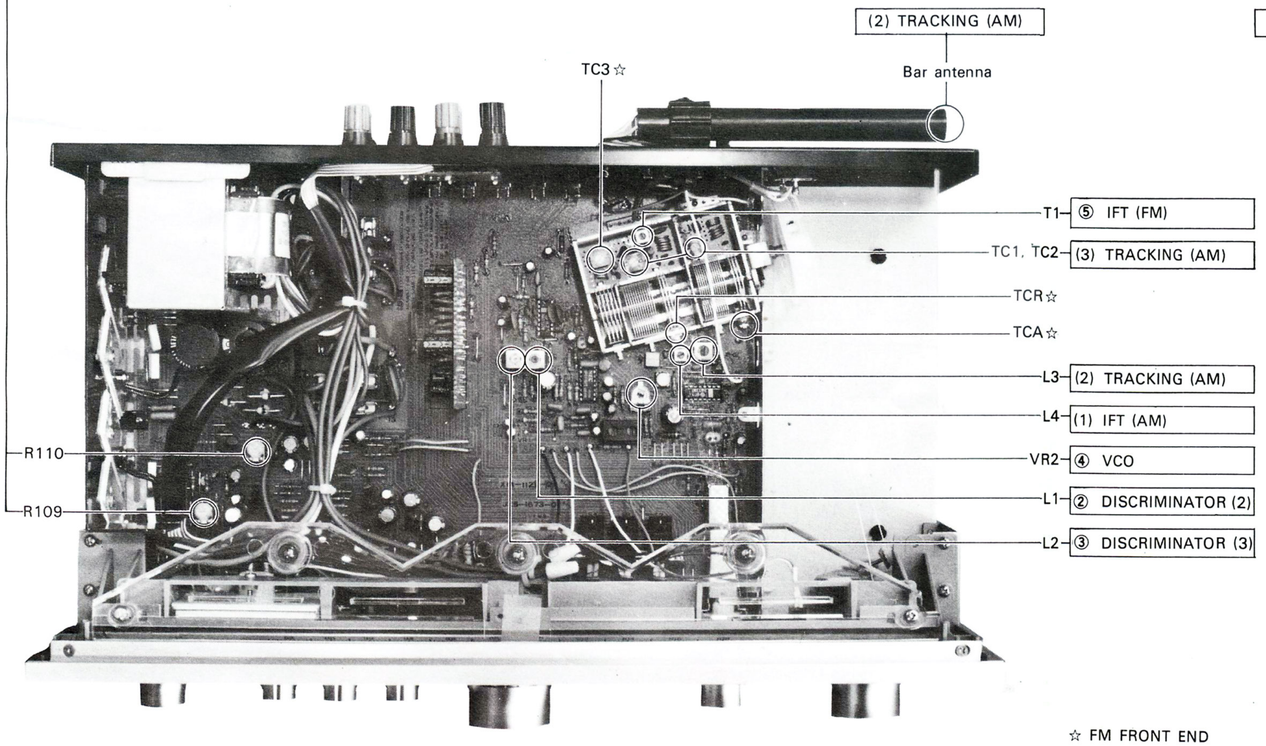

☆ FM FRONT END

PC BOARD

FRONTEND (W02-0023-05) (Component side)

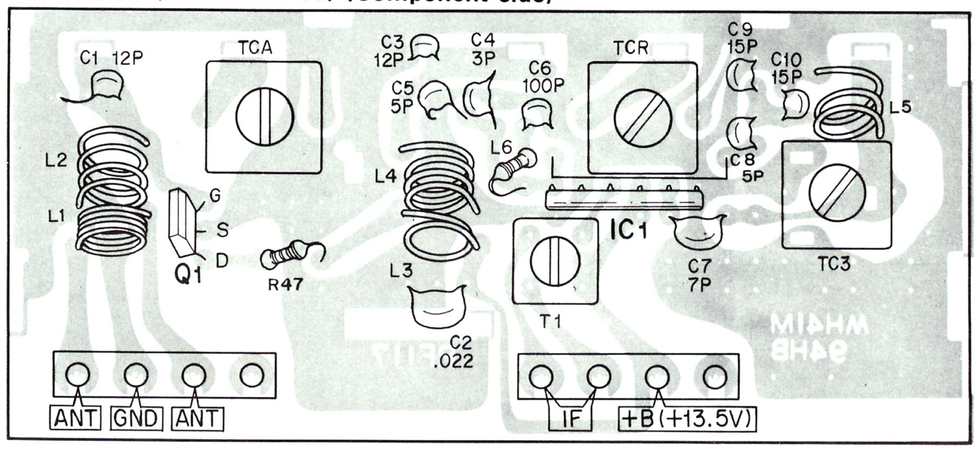

G: 0.0V
S: 0.0V
D: 12.4V

2SK55

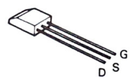

Q1: 2SK55 IC1: SC114

(KR-3010L)

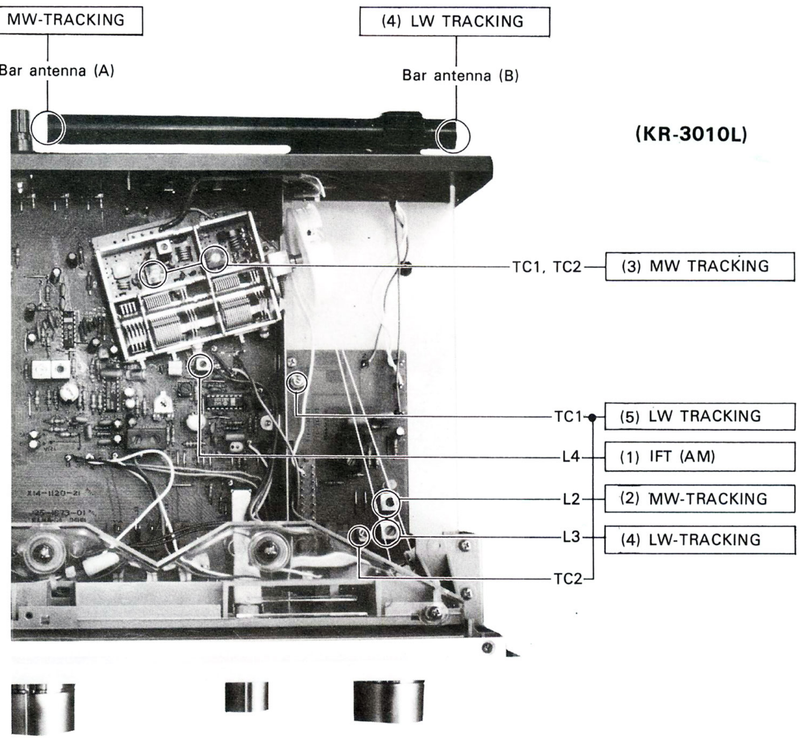

PC BOARD

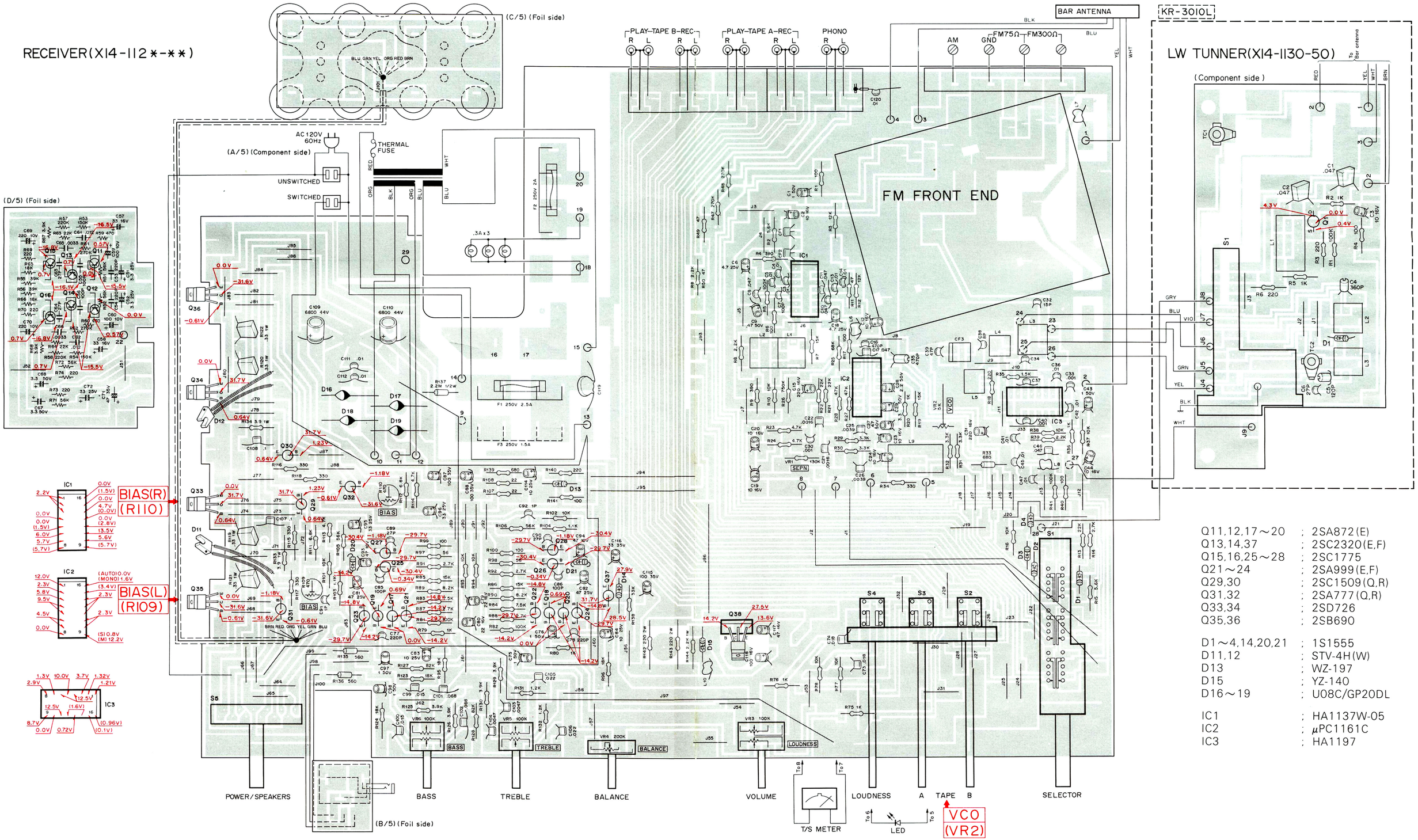

Q11,12,17～20	;	2SA872(E)
Q13,14,37	;	2SC2320(E,F)
Q15,16,25～28	;	2SC1775
Q21～24	;	2SA999(E,F)
Q29,30	;	2SC1509(Q,R)
Q31,32	;	2SA777(Q,R)
Q33,34	;	2SD726
Q35,36	;	2SB690
D1～4,14,20,21	;	1S1555
D11,12	;	STV-4H(W)
D13	;	WZ-197
D15	;	YZ-140
D16～19	;	U08C/GP20DL
IC1	;	HA1137W-05
IC2	;	μPC1161C
IC3	;	HA1197

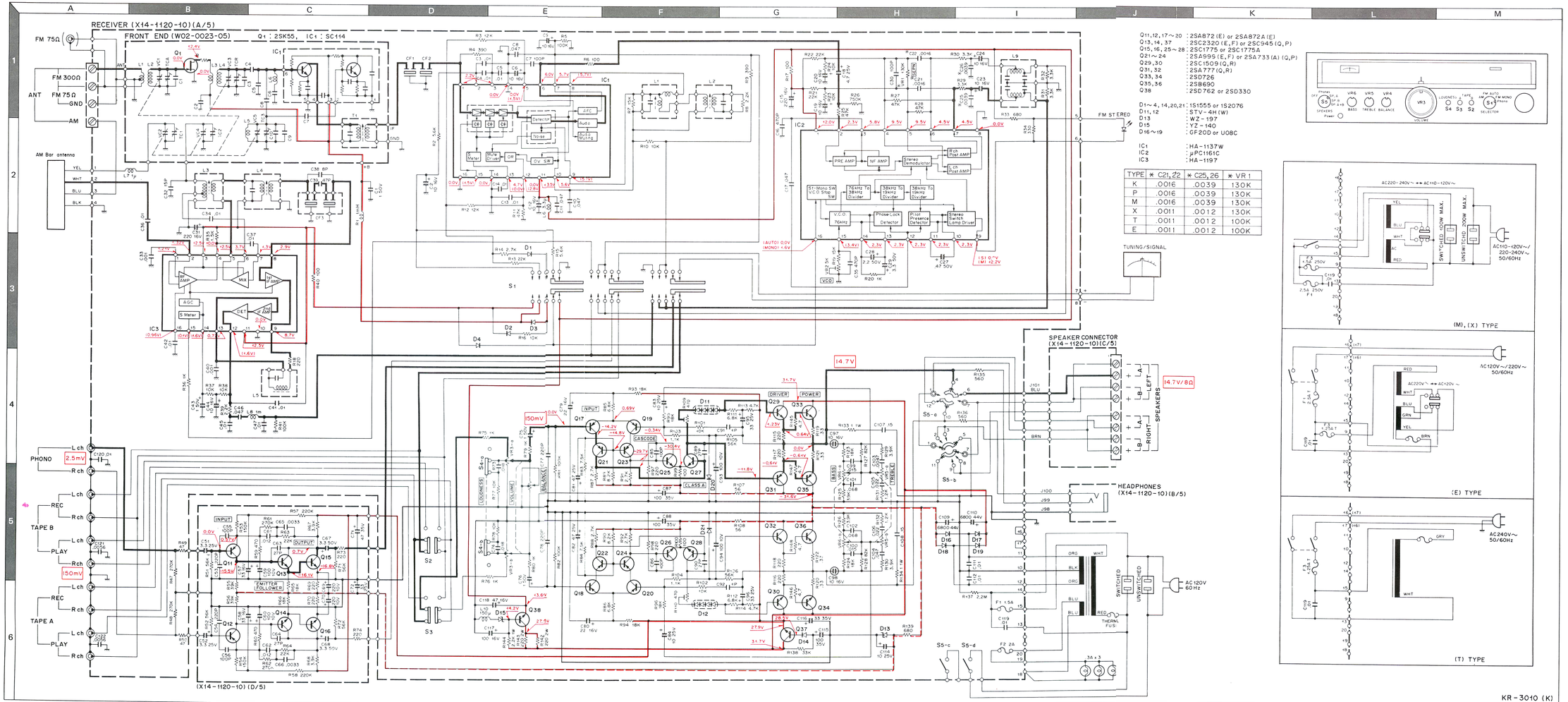

Q11,12,17~20 : 2SA872 (E) or 2SA872A (E)
Q13,14,37 : 2SC2320 (E,F) or 2SC945 (Q,P)
Q15,16,25~28 : 2SC1775 or 2SC1775A
Q21~24 : 2SA999 (E,F) or 2SA733 (A) (Q,P)
Q29,30 : 2SC1509 (Q,R)
Q31,32 : 2SA777 (Q,R)
Q33,34 : 2SD726
Q35,36 : 2SB690
Q38 : 2SD762 or 2SD330

D1~4,14,20,21 : 1S1555 or 1S2076
D11,12 : STV-4H(W)
D13 : WZ-197
D15 : YZ-140
D16~19 : GF20D or U08C

IC1 : HA-1137W
IC2 : μPC1161C
IC3 : HA-1197

TYPE	* C21,22	* C25,26	* VR 1
K	.0016	.0039	130K
P	.0016	.0039	130K
M	.0016	.0039	130K
X	.0011	.0012	130K
T	.0011	.0012	100K
E	.0011	.0012	100K

SPECIFICATIONS

AMPLIFIER SECTION

Power Output

27 watts* per channel, minimum RMS both channels driven at 8 ohms from 20 Hz to 20,000 Hz with no more than 0.05% total harmonic distortion.

Both Channels Driven
- into 8 ohms at 1,000 Hz ..... 28 W + 28 W
- into 4 ohms at 1,000 Hz ..... 28 W + 28 W

Dynamic Power Output ..... 80 W at 4 ohms

Total Harmonic Distortion (20 Hz to 20,000 Hz from AUX)
- rated power into 8 ohms 0.05%
- 1 W power into 8 ohms 0.02%

Intermoduration Distortion (60 Hz:7 kHz = 4:1 SMPTE)
- rated power into 8 ohms 0.05%
- 1 W power into 8 ohms 0.03%

Damping Factor 28
(20 - 20 kHz at 8 ohms)

Input Sensitivity/Impedance
- **PHONO** ..... 2.5 mV/50 k ohms
- **TAPE** ..... 150 mV/50 k ohms

Signal to Noise Ratio (A weighted)
- **PHONO** ..... 81 dB for 2.5 mV input
  87 dB for 5.0 mV input
- **TAPE** ..... 102 dB for 150 mV input

Maximum Phono Input Level
- **at 1,000 Hz** ..... 140 mV (rms), THD 0.05%

Frequency Response
- **PHONO RIAA Standard Curve** .. 20 Hz to 20,000 Hz ±0.3 dB
- **TAPE** ..... 7 Hz to 150,000 Hz
  +0.5 dB, −3 dB

Tone Control
- **Bass** ..... ±8 dB at 100 Hz
- **Treble** ..... ±8 dB at 10 kHz

Loudness Control (VOL. −30 dB) ... +10 dB at 100 Hz

Output Level/Impedance
- **TAPE REC Out (Pin)** ..... 150 mV/300 ohms
- **TAPE REC Out (DIN)** ..... 30 mV/80 k ohms

FM TUNER SECTION

Usable Sensitivity ..... 10.8 dBf (1.9 μV)

50 dB Quieting Sensitivity
- Mono ..... 16.8 dBf (3.8 μV)
- Stereo ..... 38.3 dBf (45 μV)

Signal to Noise Ratio at 65 dBf
- Mono ..... 76 dB
- Stereo ..... 70 dB
  72 dB at 10 mV input

Total Harmonic Distortion
- Mono 0.08%
- Stereo 0.09%

Frequency Response ..... 30 Hz to 15,000 Hz
+0.5 dB, −2.0 dB

Capture Ratio ..... 1.0 dB
Image Rejection Ratio ..... 53 dB
Spurious Response Ratio ..... 80 dB
IF Response Ratio ..... 90 dB
Alternate Channel Selectivity ..... 50 dB at 400 kHz
AM Suppression Ratio ..... 55 dB at 65 dBf
Stereo Separation Ratio ..... 48 dB at 1,000 Hz
40 dB at 100 Hz to 10,000 Hz
Subcarrier Product Ratio ..... 50 dB
Antenna Impedance ..... 300 ohms balanced &
75 ohms unbalanced
FM Frequency Range ..... 88 MHz to 108 MHz

AM TUNER SECTION

Usable Sensitivity ..... 12 μV
Signal to Noise Ratio ..... 52 dB
Image Rejection ..... 47 dB
Selectivity ..... 50 dB

GENERAL

Power Consumption ..... 2A (UL and CSA)
200 W (IEC)
130 W (8 ohms at rated power)
26 W (Non Signal)

Dimensions ..... W 471 mm (18-17/32")
H 139 mm (5-15/32")
D 358 mm (14-3/32")

Weight (Net) ..... 7.1 kg (15.7 lbs)
(Gross) ..... 8.5 kg (18.7 lbs)
Cabinet Finish ..... Simulated Walnut Grain

*Measured pursuant to Federal Trade Commission's Trade Regulation rule on Power Output Claims for Amplifier in U.S.A.

Note:
Kenwood follows a policy of continuous advancements in development. For this reason specifications may be changed without notice.

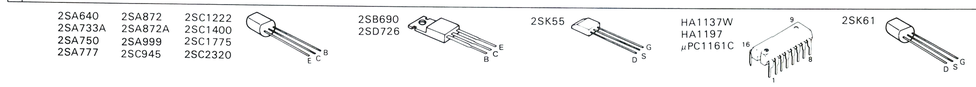

DC voltage measured with 20kΩ/V VOM.

KENWOOD

FM/MW/LW STEREO RECEIVER

KR-3010L

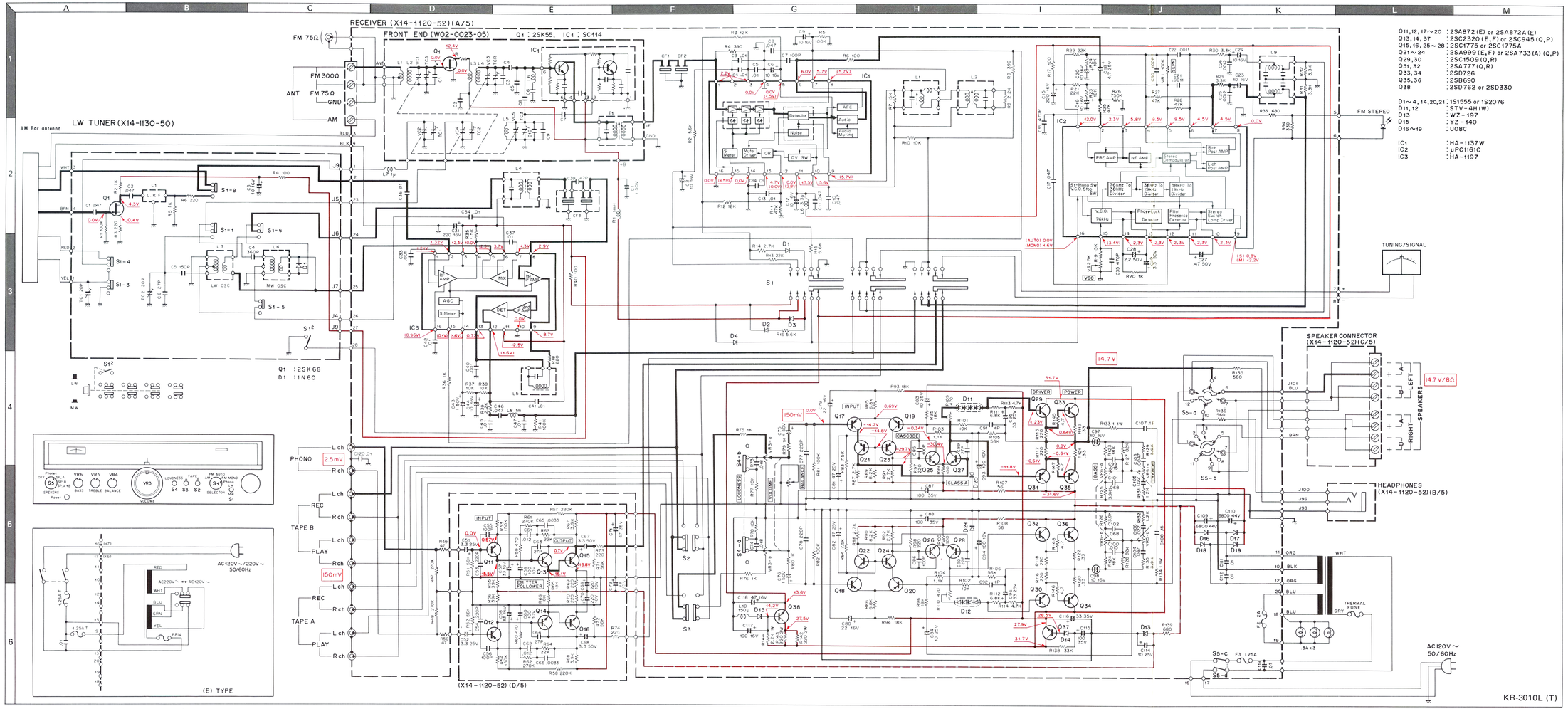

Q11,12,17~20 : 2SA872(E) or 2SA872A(E)
Q13,14,37 : 2SC2320(E,F) or 2SC945(Q,P)
Q15,16,25~28 : 2SC1775 or 2SC1775A
Q21~24 : 2SA999(E,F) or 2SA733(A)(Q,P)
Q29,30 : 2SC1509(Q,R)
Q31,32 : 2SA777(Q,R)
Q33,34 : 2SD726
Q35,36 : 2SB690
Q38 : 2SD762 or 2SD330

D1~4,14,20,21 : 1S1555 or 1S2076
D11,12 : STV-4H(W)
D13 : WZ-197
D15 : YZ-140
D16~19 : U08C

IC1 : HA-1137W
IC2 : μPC1161C
IC3 : HA-1197

SPECIFICATIONS

AUDIO SECTION

Rated Output Power
8 ohms, at 20 Hz to 20 kHz ..... 27W+27W
Maximum Power Output (DIN)
1% THD with 4 ohm Load, 1kHz ..... 37W+37W
Total Harmonic Distortion
Rated Power Output into 8 ohms 0.05%
Intermodulation distortion into 8 ohms 0.05%
Power Bandwidth (at 0.05%, T.H.D.) ..... 10Hz~35kHz
Frequency Response ..... 7Hz~150kHz
+0.5dB, −3.0dB

S/N Weighted: Rated Power Output (IEC-A)
( ) = Unweighted, at 50 mW (DIN)
Phono ..... 81 dB (58dB)
Tape ..... 102 dB (60dB)
Damping Factor 8 ohms, at 20 Hz to 20 kHz 28
Input Sensitivity/Impedance
Phono 2.5mV/50kΩ
Tape 150mV/50kΩ
Tone Control Bass ..... ±8 dB at 100 Hz
Treble ..... ±8 dB at 10 kHz
Loudness Control (−30 dB) ..... +10 dB at 100 Hz

FM TUNER SECTION

Sensitivity at 75 ohms
Mono: S/N 26 dB, 40 kHz Dev 1.0μV
Stereo: S/N 46 dB, 46 kHz Dev 35μV
50 dB Quieting Sensitivity Mono (IHF) 3.8μV
Limiting Level
−3 dB Point, 40 kHz Dev 1.0μV
Frequency Response ..... 30Hz~15kHz
+0.5dB, −2.0dB

Total Harmonic Distortion
Mono: 1 kHz, 40 kHz Dev 0.1%
Stereo: 1 kHz, 46 kHz Dev 0.15%
S/N Weighted (IEC-A)
Mono: 40 kHz Dev, 1 mV Input 73dB
Stereo: 46 kHz Dev, 1 mV Input 63dB
S/N Weighted (IHF)
Mono: 75 kHz Dev, 1 mV Input 76dB
Stereo: 75 kHz Dev, 1 mV Input 70dB
FM Stereo Separation: 1 mV Input (DIN)
250 Hz 40dB
1 kHz 43dB
6.3 kHz 40dB
12.5 kHz 36dB
Image Rejection Ratio 53dB
Selectivity
300 kHz, 20 dB Input 63dB
IF Rejection Ratio 90dB
AM Suppression Ratio 55dB
Spurious Response Ratio 80dB
Capture Ratio 1.0dB
Sub Carrier Product Ratio ..... 55dB at 19 kHz

AM TUNER SECTION

Sensitivity S/N 20 dB 12μV
S/N: 1 mV Input 52dB
Image Rejection Ratio 47dB

LW TUNER SECTION

Sensitivity S/N 20 dB 10μV
S/N: 1 mV Input 50dB
Image Rejection Ratio 70dB

GENERAL

Power Consumption ..... 200 W (IEC)
130 W (8 ohms at rated power)
Dimensions ..... W 471 mm
H 139 mm
D 328 mm
Weight (Net) ..... 7.1 kg

Note:
Kenwood follows a policy of continuous advancements in development. For this reason specifications may be changed without notice.

DC voltage measured with 20kΩ/V VOM.

2SA640	2SA872	2SC1222
2SA733A	2SA872A	2SC1400
2SA750	2SA999	2SC1775
2SA777	2SC945	2SC2320

2SB690
2SD726

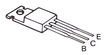

2SK55

HA1137W
HA1197
μPC1161C

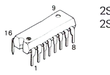

2SK68
2SK105

2SK61

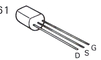

PARTS LIST

See instructions at the end of the parts list.

Ref. No. 参照番号		Parts No. 部品番号	Description 部品名／規格	Remarks 備考
KR-3010, 3010L(UNIT)				
1	2A	-	BOTTOM PLATE	
2	2A	-	METALIC FLAME	
3	2A, 2B	-	MOUNTING HARDWARE	
4	3A	-	RAIL	
5	3A	-	SUB PANEL	
6	1B	-	REAR PANEL	
7	3B	-	INDICATOR	
8	2B	-	LIGHTING BOARD	
9	3A	-	DIAL CALIBRATIONS	
-		351-0003-14	DIAL CORD	
11	1A	A03-0244-03	WOODEN CABINET	*K
11	1A	A03-0244-03	WOODEN CABINET	MT
11	1A	A03-0244-03	WOODEN CABINET	X
11	1A	A03-0245-03	WOODEN CABINET	*E
11	1A	A03-0247-03	WOODEN CABINET	*P
12	3A	A20-1463-03	FRONT PANEL ASSY (3010)	*K
12	3A	A20-1463-03	FRONT PANEL ASSY (3010)	PM
12	3A	A20-1463-03	FRONT PANEL ASSY (3010)	XE
12	3A	A20-1464-03	FRONT PANEL ASSY (3010)	*T
12	3A	A20-1471-03	FRONT PANEL ASSY(3010L)	*T
12	3A	A20-1472-03	FRONT PANEL ASSY(3010L)	*E
13	3A	A30-0172-05	DIAL BACK BOARD (3010)	*
13	3A	A30-0174-05	DIAL BACK BOARD (3010L)	*
-		B41-0220-04	CAUTION LABEL	K
-		B42-0009-04	LABEL (PASSED)	
-		B42-0473-24	LABEL (SERIAL NUMBER)	
-		B46-0055-20	WARRANTY CARD	P
-		B46-0060-00	WARRANTY CARD	T
-		B46-0061-20	WARRANTY CARD	K
-		B46-0064-00	WARRANTY CARD	X
-		B50-3013-00	INSTRUCTION MANUAL (10)	*K
-		B50-3014-00	INSTRUCTION MANUAL (10)	*P
-		B50-3014-00	INSTRUCTION MANUAL (10)	MX
-		B50-3015-00	INSTRUCTION MANUAL (10)	*T
-		B50-3016-00	INSTRUCTION MANUAL (10)	*E
-		B50-3022-00	INSTRUCTION MANUAL(10L)	*T
-		B50-3023-00	INSTRUCTION MANUAL(10L)	*E
14	1A	B04-0067-04	MESH PLATE	*K
14	1A	B04-0067-04	MESH PLATE	MX
14	1A	B04-0067-04	MESH PLATE	T
14	1A	B04-0071-04	MESH PLATE	*E
14	1A	B04-0072-04	MESH PLATE	*P
15	3A	B07-0279-04	ESCUTCHEON	
16	3A	B10-0247-04	FRONT GLASS	
17	3A	B21-0034-04	DIAL POINTER	
18	3B	B30-0182-15	LED	
19	2B	B30-0192-05	LAMP	
20	2B	B31-0303-05	T/S METER	
21	2B	D15-0164-04	PULLEY	
22	3A, 3B	D15-0170-14	PULLEY	
23	3A	D15-0172-04	PULLEY	
24	3B	D20-0502-13	DIAL SHAFT	
-		E29-0114-05	WIRE CONECTION CAP	
25	1B	E03-0008-05	AC OUTLET	KP
25	1B	E03-0017-05	AC OUTLET	MX
26	1B	E04-0004-05	RECEPTACLE (FM ANTENNA)	TE
27	1B	E30-0181-05	POWER CORD	KP
27	1B	E30-0185-05	POWER CORD	X
27	1B	E30-0459-05	POWER CORD	E
27	1B	E30-0545-05	POWER CORD	M
27	1B	E30-0602-05	POWER CORD	T
28	2B	G01-0045-24	COILED SPRING	
-		H01-3037-04	CARTON BOX (3010)	*K
-		H01-3037-04	CARTON BOX (3010)	MX
-		H01-3038-04	CARTON BOX (3010)	*P
-		H01-3039-04	CARTON BOX (3010)	*T
-		H01-3045-04	CARTON BOX (3010L)	*E
-		H01-3046-04	CARTON BOX (3010L)	*T
-		H01-3047-04	CARTON BOX (3010)	*E
-		H10-1535-02	POLYSTYRENE FIXTURE	*
-		H20-0417-04	COVER	M
-		H20-0454-04	COVER	KP
-		H20-0454-04	COVER	TX
-		H20-0454-04	COVER	E
-		H25-0078-04	BAG	
-		J61-0045-15	WIRE BAND	
29	2A	J02-0103-05	FOOT	
30	1B	J19-0507-05	BAR ANTENNA HOLDER	
31	1B	J41-0034-05	POWER CORD BUSHING	KP
31	1B	J42-0083-05	POWER CORD BUSHING	M
31	1B	J42-0084-05	POWER CORD BUSHING	E
31	1B	J42-0085-05	POWER CORD BUSHING	TX
32	3A	K23-0327-04	KNOB (TUNING)	
33	2B	K27-0096-04	KNOB (PUSH SWITCH)	
34	3A	K29-0309-04	KNOB (VOLUME)	
35	3A	K29-0310-04	KNOB (SELECT. POWER/SP)	
36	3A	K29-0311-04	KNOB (TONE, BALANCE)	
37	1B	L01-1831-05	POWER TRANSFORMER	*K
37	1B	L01-1832-05	POWER TRANSFORMER	*P
37	1B	L01-1835-05	POWER TRANSFORMER	*M
37	1B	L01-1835-05	POWER TRANSFORMER	X
37	1B	L01-1836-05	POWER TRANSFORMER	*E
37	1B	L01-1837-05	POWER TRANSFORMER	*T
38	1B	N08-0128-35	DRESSED SCREW (GND)	
39	3A	N09-0293-05	SCREW (PULLEY)	
40	1A	N09-0308-05	SCREW (CASE)	
41	3A	N10-2090-46	HEXAGON NUT	
42	1A	S31-2053-05	SLIDE SWITCH	MX
42	1A	S31-2053-05	SLIDE SWITCH	E
-		T90-0202-05	FM INDOOR ANTENNA	
43	1B	T90-0083-05	AM BAR ANTENNA (3010)	
43	1B	T90-0087-05	AM BAR ANTENNA (3010L)	
44	1B, 2B	X14-1120-10	RECEIVER PCB ASSY (10)	*K
44	1B, 2B	X14-1120-10	RECEIVER PCB ASSY (10)	P
44	1B, 2B	X14-1120-21	RECEIVER PCB ASSY (10)	*M
44	1B, 2B	X14-1120-21	RECEIVER PCB ASSY (10)	X
44	1B, 2B	X14-1120-51	RECEIVER PCB ASSY (10)	*T
44	1B, 2B	X14-1120-52	RECEIVER PCB ASSY (10L)	*T
44	1B, 2B	X14-1122-71	RECEIVER PCB ASSY (10)	*E
44	1B, 2B	X14-1122-72	RECEIVER PCB ASSY (10L)	*E
45	2B	X14-1130-50	LW TUNER PCB ASSY (10L)	*T
45	2B	X14-1130-50	LW TUNER PCB ASSY (10L)	E
RECEIVER(X14-112)				
-		212-1016-05	PLASTIC TUBE	
C1		C24-1710-51	ELECTRO 1UF 50WV	
C2		C24-1210-61	ELECTRO 10UF 16WV	
C3		C55-1710-38	CERAMIC 0.01UF Z	

www.hifiengine.com

PARTS LIST

Ref. No. 参照番号	Parts No. 部品番号	Description 部品名／規格	Remarks 備考
C4 ,5	C55-1710-38	CERAMIC 0.01UF Z	
C6	C24-1447-51	ELECTRO 4.7UF 25WV	
C7	C71-1710-15	CERAMIC 100PF J	
C8	C55-1747-38	CERAMIC 0.047UF Z	
C9	C24-1747-41	ELECTRO 0.47UF 50WV	
C10 ,11	C55-1747-38	CERAMIC 0.047UF Z	
C12	C24-1210-61	ELECTRO 10UF 16WV	
C13 ,14	C55-1710-38	CERAMIC 0.01UF Z	
C15	C24-1222-71	ELECTRO 220UF 16WV	
C16	C52-1747-16	CERAMIC 470PF K	
C17	C46-1747-36	MYLAR 0.047UF K	
C18	C24-1447-51	ELECTRO 4.7UF 25WV	
C19 ,20	C24-1210-61	ELECTRO 10UF 16WV	
C21 ,22	C46-1711-25	MYLAR 0.0011UF J	TE
C21 ,22	C46-1716-25	MYLAR 0.0016UF J	KP
C21 ,22	C46-1716-25	MYLAR 0.0016UF J	MX
C23 ,24	C24-1210-61	ELECTRO 10UF 16WV	
C25 ,26	C46-1712-25	MYLAR 0.0012UF J	TE
C25 ,26	C46-1739-25	MYLAR 0.0039UF J	KP
C25 ,26	C46-1739-25	MYLAR 0.0039UF J	MX
C27	C24-1747-41	ELECTRO 0.47UF 50WV	
C28	C24-1722-51	ELECTRO 2.2UF 50WV	
C29	C24-1733-51	ELECTRO 3.3UF 50WV	
C30	C71-1710-15	CERAMIC 100PF J	
C31	C24-1222-71	ELECTRO 220UF 16WV	
C32	C70-1715-05	CERAMIC 15PF J	
C33	C52-1710-26	CERAMIC 0.001UF K	
C34	C90-0245-05	CERAMIC 0.01UF J	
C35	C48-1747-15	POLYSTY 470PF J	
C36	C55-1710-38	CERAMIC 0.01UF Z	
C37	C90-0245-05	CERAMIC 0.01UF J	
C38	C71-1708-02	CERAMIC 8PF D	
C39	C71-1747-05	CERAMIC 47PF J	
C40	C52-1710-26	CERAMIC 0.001UF K	
C41 ,42	C55-1710-38	CERAMIC 0.01UF Z	
C43	C24-1710-51	ELECTRO 1UF 50WV	
C44	C24-1210-61	ELECTRO 10UF 16WV	
C45	C55-1710-38	CERAMIC 0.01UF Z	
C46	C46-1747-36	MYLAR 0.047UF K	
C47	C55-1710-38	CERAMIC 0.01UF Z	
C51 ,52	C25-1433-57	LL-ELEC 3.3UF 25WV	
C53 ,54	C71-1722-15	CERAMIC 220PF J	
C55 ,56	C71-1710-15	CERAMIC 100PF J	
C57 ,58	C24-1233-61	ELECTRO 33UF 16WV	
C59 ,60	C24-1010-71	ELECTRO 100UF 10WV	
C61 ,62	C46-1712-35	MYLAR 0.012UF J	
C63 ,64	C71-1727-05	CERAMIC 27PF J	
C65 ,66	C46-1733-25	MYLAR 0.0033UF J	
C67 ,68	C24-1733-51	ELECTRO 3.3UF 50WV	
C69 ,70	C24-1022-71	ELECTRO 220UF 10WV	
C71	C24-6547-61	ELECTRO 47UF 35WV	
C72	C24-1433-61	ELECTRO 33UF 25WV	
C73 ,74	C46-1718-36	MYLAR 0.018UF K	
C75 ,76	C25-1710-57	LL-ELEC 1UF 50WV	
C77 ,78	C71-1722-15	CERAMIC 220PF J	
C79 ,80	C24-1222-61	ELECTRO 22UF 16WV	
C81 ,82	C24-1447-61	ELECTRO 47UF 25WV	
C83 ,84	C24-1410-61	ELECTRO 10UF 25WV	
C85 ,86	C71-1710-15	CERAMIC 100PF J	
C87 ,88	C24-6510-71	ELECTRO 100UF 35WV	
C89 ,90	C71-1727-05	CERAMIC 27PF J	
C91 ,92	C71-1701-01	CERAMIC 1PF C	

Ref. No. 参照番号	Parts No. 部品番号	Description 部品名／規格	Remarks 備考
C93 ,94	C24-1047-61	ELECTRO 47UF 10WV	
C95 ,96	C24-1433-61	ELECTRO 33UF 25WV	
C97 ,98	C26-1710-57	NP-ELEC 1UF 50WV	
C99 ,100	C46-1715-36	MYLAR 0.015UF K	
C101,102	C46-1768-36	MYLAR 0.068UF K	
C103,104	C46-1747-26	MYLAR 0.0047UF K	
C105,106	C46-1722-36	MYLAR 0.022UF K	
C107,108	C46-1710-47	MYLAR 0.1UF M	
C109,110	C90-0412-05	ELECTRO 6800UF 44WV	*
C111,112	C54-2710-39	CERAMIC 0.01UF P	
C114	C24-1410-61	ELECTRO 10UF 25WV	
C115	C24-6510-71	ELECTRO 100UF 35WV	
C116	C24-6533-61	ELECTRO 33UF 35WV	
C117	C24-1247-61	ELECTRO 47UF 16WV	
C118	C24-1210-71	ELECTRO 100UF 16WV	
C119	C54-3310-39	CERAMIC 0.01UF DC2KV	TE
C119	C91-0023-05	CERAMIC 0.01UF 125V	KP
C119	C91-0079-05	CERAMIC 0.01UF 250V	MX
C120	C55-1710-38	CERAMIC 0.01UF Z	
101 3A	E11-0060-15	PHONE JACK	
102 2B	E13-0423-05	PHONO JACK (4P)	
103 2B	E13-0612-05	PHONO JACK (6P)	
104 2B	E20-0439-05	TERMINAL BOARD (ANT.)	
105 1B	E20-0813-05	TERMINAL BOARD (SP.)	
-	F09-0033-05	CAPACITOR COVER (C119)	TE
106 2B	F01-0315-03	HEAT SINK	*
107 2B	F01-0321-04	HEAT SINK	*
F1	F05-2521-05	FUSE 2.5A FIG. 110	MX
F1	F05-2523-05	FUSE 2.5A FIG. 110	KP
F1	F05-2525-05	FUSE 2.5AT FIG. 110	E
F2	F05-2021-05	FUSE 2A FIG. 109	KP
F2	F05-2023-05	FUSE 2A FIG. 109	MX
F2	F05-2029-05	FUSE 2A FIG. 109	TE
F3	F05-1222-05	FUSE 1.25AT FIG. 108	TE
F3	F05-1521-05	FUSE 1.5A FIG. 108	MX
111 2B	J13-0055-05	FUSE HOLDER	
112 3A	J32-0253-14	BOSS	
113 3A	J32-0254-14	BOSS	
CF1 ,2	L72-0052-15	CERAMIC FILTER (FM)	KP
CF1 ,2	L72-0052-15	CERAMIC FILTER (FM)	MX
CF1 ,2	L72-0059-05	CERAMIC FILTER (FM)	TE
CF3	L72-0078-05	CERAMIC FILTER (AM)	
L1	L30-0316-05	IFT (FM,DISCRIMINATOR)	
L2	L30-0317-05	IFT (FM,DISCRIMINATOR)	
L3	L32-0225-05	OSC COIL (AM) (3010)	
L4	L30-0329-05	IFT (AM)	
L5	L30-0284-05	IFT (AM)	
L6	L40-2292-44	INDUCTOR 2.2UH	
L7	L40-1092-44	INDUCTOR 1UH	
L8	L40-1021-45	INDUCTOR 1MH	
L9	L79-0072-05	LOW PASS FILTER (MPX)	
L10	L40-1511-44	INDUCTOR 150UH	
R1	L40-1021-11	INDUCTOR 1MH	
-	N09-0309-05	SCREW	
114 2B	N10-2030-46	HEXAGON NUT (HEAT SINK)	
R17	R43-1210-15	FL-PROOF RD100 J 2E	
R33	R40-8368-16	RC 680 K 2H	
R40	R43-1210-15	FL-PROOF RD100 J 2E	
R97 ,98	R43-1256-05	FL-PROOF RD56 J 2E	
R99 ,100	R43-1210-15	FL-PROOF RD100 J 2E	

www.hifiengine.com

PARTS LIST

Ref. No. 参照番号	Parts No. 部品番号	Description 部品名／規格	Remarks 備考
R107, 108	R43-1222-05	FL-PROOF RD22 J 2E	
R109, 110	R12-0065-05	TRIMMING POT. 470(B)	
R115-118	R43-1233-15	FL-PROOF RD330 J 2E	
R119-122	R92-0112-05	CEMENT 0.33 J 3D	
R133, 134	R47-5439-95	FL-PROOF RS3.9 J 3A	
R135, 136	R40-8356-16	RC 560 K 2H	
R137	R92-0173-05	RC 2.2M J 2H	K
R139	R43-1268-15	FL-PROOF RD680 J 2E	
R140	R43-1222-15	FL-PROOF RD220 J 2E	
R141	R43-1210-15	FL-PROOF RD100 J 2E	
R142, 143	R47-5522-15	FL-PROOF RS220 J 3D	
R144	R47-5422-25	FL-PROOF RS2.2K J 3A	
VR2	R12-2016-05	TRIMMING POT. 5K(B)	
VR3	R06-5041-05	POT. METER 100KB FIG. 115	
VR4	R01-5025-05	POT. METER 200KM FIG. 116	
VR5 ,6	R06-5043-05	POT. METER 100KC FIG. 117	*
S1	S29-1124-05	ROTARY SWITCH FIG. 118	
S2 -4	S42-3029-05	PUSH SWITCH FIG. 119	
S5	S02-1016-05	ROTARY SWITCH FIG. 120	KP
S5	S02-1017-05	ROTARY SWITCH FIG. 120	MX
S5	S02-1018-05	ROTARY SWITCH FIG. 120	TE
D1 -4	V11-0076-05	1S1555	
D11 ,12	V11-5100-10	STV-4H(W)	
D13	V11-4100-30	WZ-197	
D14	V11-0076-05	1S1555	
D15	V11-0254-05	YZ-140	
D16 -19	V11-2100-50	U08C	TE
D16 -19	V11-2400-40	GP20DL	KP
D16 -19	V11-2400-40	GP20DL	MX
D20 ,21	V11-0076-05	1S1555	
IC1	V30-0192-05	HA1137W-05	
IC2	V30-0343-10	UPC1161C	*
IC3	V30-0196-05	HA1197	
Q11 ,12	V01-0189-05	2SA872(E)	
Q13 ,14	V03-2320-10	2SC2320(E,F)	*
Q15 ,16	V03-1775-00	2SC1775	
Q17 -20	V01-0189-05	2SA872(E)	
Q21 -24	V01-0999-10	2SA999(E,F)	*
Q25 -28	V03-1775-00	2SC1775	
Q29 ,30	V03-0494-05	2SC1509(Q,R)	
Q31 ,32	V01-0208-05	2SA777(Q,R)	
Q33 ,34	V04-0726-00	2SD726	*
Q35 ,36	V02-0690-00	2SB690	*
Q37	V03-2320-10	2SC2320(E,F)	*
Q38	V04-0762-00	2SD762	
121 2B	W02-0023-05	FM FRONT END (3010)	
121 2B	W02-0025-05	FM FRONT END (3010L)	
LW TUNER(X14-1130-50)(KR-3010L)			
C1 ,2	C46-1747-37	MYLAR 0.047UF M	
C3	C24-1210-61	ELECTRO 10UF 16WV	
C4	C47-1736-15	POLYSTY 360PF J	
C5	C47-1712-15	POLYSTY 120PF J	
C6	C71-1727-05	CERAMIC 27PF J	
TC1 ,2	C05-0013-15	TRIMMER CAPACITOR	
L1	L79-0063-05	FILTER (LW RF AMP)	
L2	L32-0205-15	OSC COIL (MW)	
L3	L32-0190-05	OSC COIL (LW)	
S1	S40-8005-05	PUSH SWITCH FIG. 122	
D1	V11-0051-05	1N60	

Ref. No. 参照番号	Parts No. 部品番号	Description 部品名／規格	Remarks 備考
Q1	V09-0122-50	2SK68(L,M,N)	
FRONT END(W02-002)			
C1	C71-1712-06	CERAMIC 22PF K	
C2	C55-1722-38	CERAMIC 0.0022UF Z	
C3	C71-1722-06	CERAMIC 12PF K	
C4	C71-1703-02	CERAMIC 3PF D	
C5	C71-1705-02	CERAMIC 5PF D	
C6	C71-1710-16	CERAMIC 100PF K	
C7	C71-1707-02	CERAMIC 7PF D	
C8	C71-1705-91	CERAMIC 0.5PF C	
C9 ,10	C66-1715-02	CERAMIC 15PF D	
TC1 ,2	C05-0071-00	TRIMMER CAPACITOR	
TC3	C05-0075-00	TRIMMER CAPACITOR	
L6	L33-0273-00	CHOKE COIL	*
T1	L30-0325-00	IFT (FM)	*
IC1	V30-0345-10	SC114	*
Q1	V09-0071-05	2SK55	

www.hifiengine.com

PARTS LIST

INSTRUCTION FOR PARTS LIST

Ref. No. 参照番号	Parts No. 部品番号	Description 部品名／規格	Remarks 備考
12 3A	A20-1463-03	FRONT PANEL ASSY (3010)	*K
12 3A	A20-1463-03	FRONT PANEL ASSY (3010)	FM
12 3A	A20-1463-03	FRONT PANEL ASSY (3010)	XE
12 3A	A20-1464-03	FRONT PANEL ASSY (3010)	*T
12 3A	A20-1471-03	FRONT PANEL ASSY(3010L)	*T
R142, 143	R47-5522-15	FL-PROOF RS220 J 3D	
R144	R47-5422-25	FL-PROOF RS2.2K J 3A	
VR2	R12-2016-05	TRIMMING POT. 5K(B)	
VR3	R06-5041-05	POT. METER 100KB FIG. 115	
VR4	R01-5025-05	POT. METER 200KM FIG. 116	

① Exploded view drawing No.
② Position in exploded view.
③ Symbol of new parts.
④ Area to which parts are shipped., Example: A20-1390-13 is the parts No. of FRONT PANEL ASS'Y for the "K" type products (for USA).
When this column is blank, it means that the same type of parts (same parts No.) are used for the products shipped to all areas.
⑤ (3010) or (10) is in use for "KR-3010", (3010L) or (10L) for "KR-3010L".
⑥ Reference No. in schematic diagram.
⑦ Abbreviation of "Flame proof metal oxide film resistor" All capacitors and resistors are listed using abbreviations.
⑧ Abbreviations

* Abbreviations of capacitors (Parts No. with initial letter "C")

ELECTRO ..... Electrolytic capacitor
LL-ELEC ..... Low leak electrolytic capacitor
NP-ELEC ..... Non-pole electrolytic capacitor
MICA ..... Mica capacitor
POLYSTY ..... Polystyrene capacitor
MYLAR ..... Mylar capacitor
CERAMIC ..... Ceramic capacitor
TANTAL ..... Tantalum capacitor
MF ..... Metallized film capacitor
OIL ..... Oil capacitor
The unit "UF" is used in lieu of "μF".

* Abbreviations of resistors (Parts No. with initial letters "R").

RC ..... Carbon composition resistor
RD ..... Carbon film resistor
FL-PROOF RD ..... Flame-proof carbon film resistor
RW ..... Wire wound power resistor
FL-PROOF RS ..... Flame-proof metal oxide film resistor
RN ..... Metal film resistor

2B ..... Rated wattage 1/8W
2E ..... Rated wattate 1/4W
2H ..... Rated wattage 1/2W
3A ..... Rated wattage 1W
3D ..... Rated wattage 2W
3F ..... Rated wattage 3W
3G ..... Rated wattage 4W
3H ..... Rated wattage 5W
All resistor values are indicated with the unit (Ω) omitted.

* Abbreviations common to capacitors and resistors.

C ..... ±0.25 pF (Used for capacitors only)
D ..... ±0.5 pF (Used for capacitors only)
F ..... ±1%
G ..... ±2%
J ..... ±5%
K ..... ±10%
M ..... ±20%
Z ..... +80%, −20% (Used for capacitors only)
P ..... +100%, −0% (Used for capacitors only)

⑨ Resistors RD (carbon composition resistors) are not listed in the parts list. For values, refer to the schematic diagram.

SEMICONDUCTOR SUBSTITUTIONS

Ref. No.	Semiconductor Name	Semiconductor Substitutions
W02-0023-05		
Q1	2SK55	2SK61 (GR)
X14-112*-**		
Q11,12,17～20	2SA872(E)	2SA872A(E), 2SA750(I)(E), 2SA640(E)
Q13,14,37	2SC2320(E,F)	2SC945(Q,P), 2SC1400(E,U), 2SC1775(E,F)
Q15,16,25～28	2SC1775	2SC1222, 2SC1400
Q21～24	2SA999(E,F)	2SA733A(Q,P)
Q29,30	2SC1509(Q,R)	—
Q31,32	2SA777(Q,R)	—
Q33,34	2SD726	—
Q35,36	2SB690	—
X14-1130-50		
Q1	2SK68	2SK105

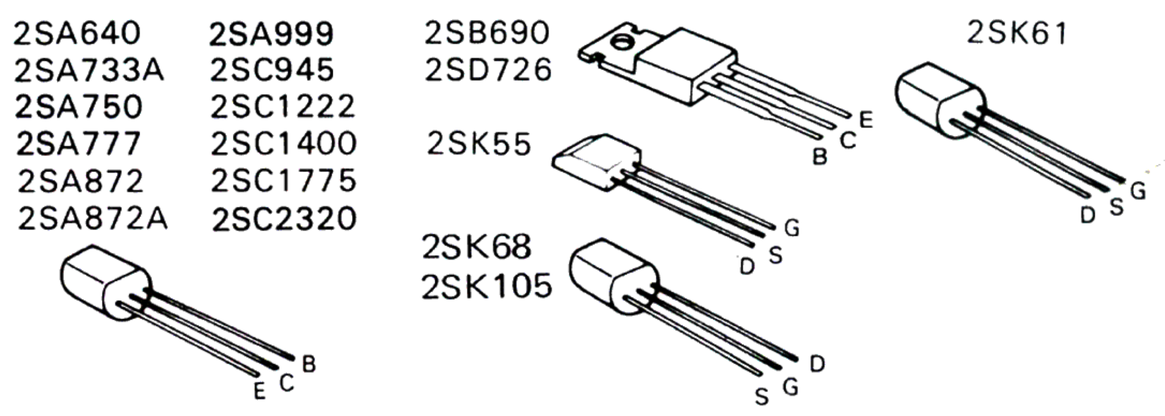

A product of
TRIO-KENWOOD CORPORATION
6-17, 3-chome, Aobadai, Meguro-ku, Tokyo 153, Japan

KENWOOD ELECTRONICS, INC.
1315 E. Watsoncenter Rd, Carson, California 90745
75 Seaview Drive, Secaucus, New Jersey 07094, U.S.A.
TRIO-KENWOOD ELECTRONICS, N.V.
Leuvensesteenweg 504 B-1930 Zaventem, Belgium
TRIO-KENWOOD ELECTRONICS GmbH
Rudolf-Braas-Str. 20, 6056 Heusenstamm, West Germany
TRIO-KENWOOD FRANCE S.A.
5, Boulevard Ney, 75018 Paris, France
TRIO-KENWOOD SVENSKA AB
Kemistvagen 10A, S-183 21 Taby, Sweden
TRIO-KENWOOD (AUSTRALIA) PTY. LTD.
30 Whiting St., Artarmon, N.S.W. 2064, Australia
KENWOOD & LEE ELECTRONICS, LTD.
Room 501, Wang Kee Building, 5th Floor, 34-37, Connaught Road, Central, Hong Kong

© 1979-6 PRINTED IN JAPAN B51-0611-00 (G) 3,616

www.hifiengine.com