SERVICE MANUAL SR560

marantz®

model SR560

Stereophonic Receiver

marantz

MARANTZ DESIGN AND SERVICE

Using superior design and selected high grade components, MARANTZ Company has created the ultimate in stereo sound. Only original MARANTZ parts can insure that your MARANTZ product will continue to perform to the specifications for which it is famous.

Parts for your MARANTZ stereo are generally available within 72 hours throughout the nation via a toll-free line to our National Parts Depot in California. The sales professionals who take your call immediately refer to their own desk top computer terminal and can quickly determine the availability and price information you require. If, for some reason, your order should exceed our available stock, we usually can instantly provide an alternate replacement part or current delivery information. When the order is placed and confirmed, the computer simultaneously generates "hard copy" orders at the distribution center. As hard copies come directly from the computer to the national parts depot, your requested stock is assembled and prepared for shipment and placed on the first available carrier for delivery to you.

ORDERING PARTS

Phone orders will eliminate mail delays, and we encourage the use of this method. If you order by mail, use MARANTZ parts order forms which are available from our National Parts Depot located at the following address:

USA

MARANTZ NATIONAL PARTS DEPARTMENT
20525 Nordhoff Street
Chatworth, California 91311
Phone: 1-800-423-5108
1-818-998-9333

The following information must be supplied to eliminate delays in processing your order:

1. Complete address.
2. Complete part numbers.
3. Complete description of parts.
4. Model number for which part is required (indicate MARANTZ).
5. Account number (for account customers only).

Direct consumers will be provided with the current retail price quotation on available parts in order to advise them of the cost of the parts and shipping.

marantz®

www.hifiengine.com

TABLE OF CONTENTS

Page

Designation 1

1. P.W. BOARDS 2

2. TEST EQUIPMENT REQUIRED FOR SERVICING 2

3. FREQUENCY SYNTHESIZER RADIO TUNING SYSTEM 3

4. ALIGNMENT PROCEDURES 11

5. BLOCK DIAGRAM 14

6. DIAGRAM AND COMPONENT LOCATIONS 15

6-1. MAIN (TUNER/AMP) P.W.B ASS'Y (P100)
Schematic Diagram and Component Locations 15

6-2. CONTROL P.W.B ASS'Y (P500)
Schematic Diagram and Component Locations 18

6-2-1. *GRAPHIC EQ/VOLUME/FLT DRIVER ASS'Y (P500)
Schematic Diagram and Component Locations 18

6-2-2. *SPEAKER SWITCH ASS'Y (P503)
Schematic Diagram and Component Locations 18

6-2-3. *POWER SWITCH ASS'Y (P502)
Schematic Diagram and Component Locations 19

6-2-4. *VIDEO ASS'Y (P501)
Schematic Diagram and Component Locations 20

7. EXPLODED VIEW AND PARTS LIST 21

8. TECHNICAL SPECIFICATIONS 30

9. SCHEMATIC DIAGRAM 35

MODEL SR560 STEREOPHONIC RECEIVER

www.hifiengine.com

INTRODUCTION

This service manual was prepared for use by Authorized Warranty Stations and contains service information for Marantz Model SR560 Stereophonic Receiver.

Servicing information and voltage data included in this manual are intended for use by the knowledgeable and experienced technician only. All instructions should be read carefully. No attempt should be made to proceed without a good understanding of the operation of the receiver.

The parts list furnishes information by which replacement parts may be ordered from the Marantz Company. A simple description is included for parts which can usually be obtained through local suppliers.

1. P.W. BOARDS

1. MAIN (TUNER/AMP) P.W.B ASS'Y . . **(P100)**
2. CONTROL P.W.B ASS'Y . . . . . **(P500)**
   - 2-1. GRAPHIC EQ/VOLUME FLT DRIVER ASS'Y . . . . . **(P500)**
   - 2-2. SPEAKER SWITCH ASS'Y . . . . **(P503)**
   - 2-3. POWER SWITCH ASS'Y. . . . . (P502)
   - 2-4. VIDEO ASS'Y . . . . . (P501)

2. TEST EQUIPMENT REQUIRED FOR SERVICING

This table lists the test equipment required for servicing the Model SR560 Receiver.

Item	Manufacturer and Model No.	Use
AM Signal Generator		Signal source for AM alignment
Test Loop		Use with AM Signal Generator
FM Signal Generator MPX Signal Generator	Sound Technology Model 1000A	Signal source for FM alignment Stereo separation alignment and trouble shooting
Distortion Analyzer Audio Oscillator AC VTVM	Sound Technology MODEL 1701A	Distortion measurements Sinewave and squarewave signal source Voltage measurements (AC)
Oscilloscope	Tektronix Model T932 Philips Model 3232	Waveform analysis and trouble shooting and ASO alignment
Frequency Counter	Fluke Model 1900A	MPX Oscillator adjustment (VCO)
Circuit Tester		Trouble shooting
DC VTVM	Fluke Model 8000 "Digital" Simpson Model 313, Triplet Model 801	Voltage measurements (DC)
AC Wattmeter	Simpson Model 1379	Monitors primary power to amplifier
AC Ammeter	Commercial Grade (1-10A)	Monitors amplifier output under short circuit condition
Line Voltmeter	Simpson Model 1359	Monitors potential of primary power to amplifier
Variable Autotransformer		Adjusts level of primary power to amplifier
Shorting Plug	Use phono plug with 600-ohm across center pin and shell	Shorts amplifier input to eliminate noise pickup
Output Load (8 ohms, ±0.5%, 100W)	Commercial Grade	Provides 8-ohm load for amplifier output termination

www.hifiengine.com

3. FREQUENCY SYNTHESIZER RADIO TUNING SYSTEM

3.1 Construction of Synthesizer System

This frequency synthesizer is composed of a microcomputer (TC 9147BP), PRESCALER (TC 6104) pass FILTER, crystals and FIP Dymamic Driver (TC 9158P), fluorescent indication tubes, as shown in Fig. 1.

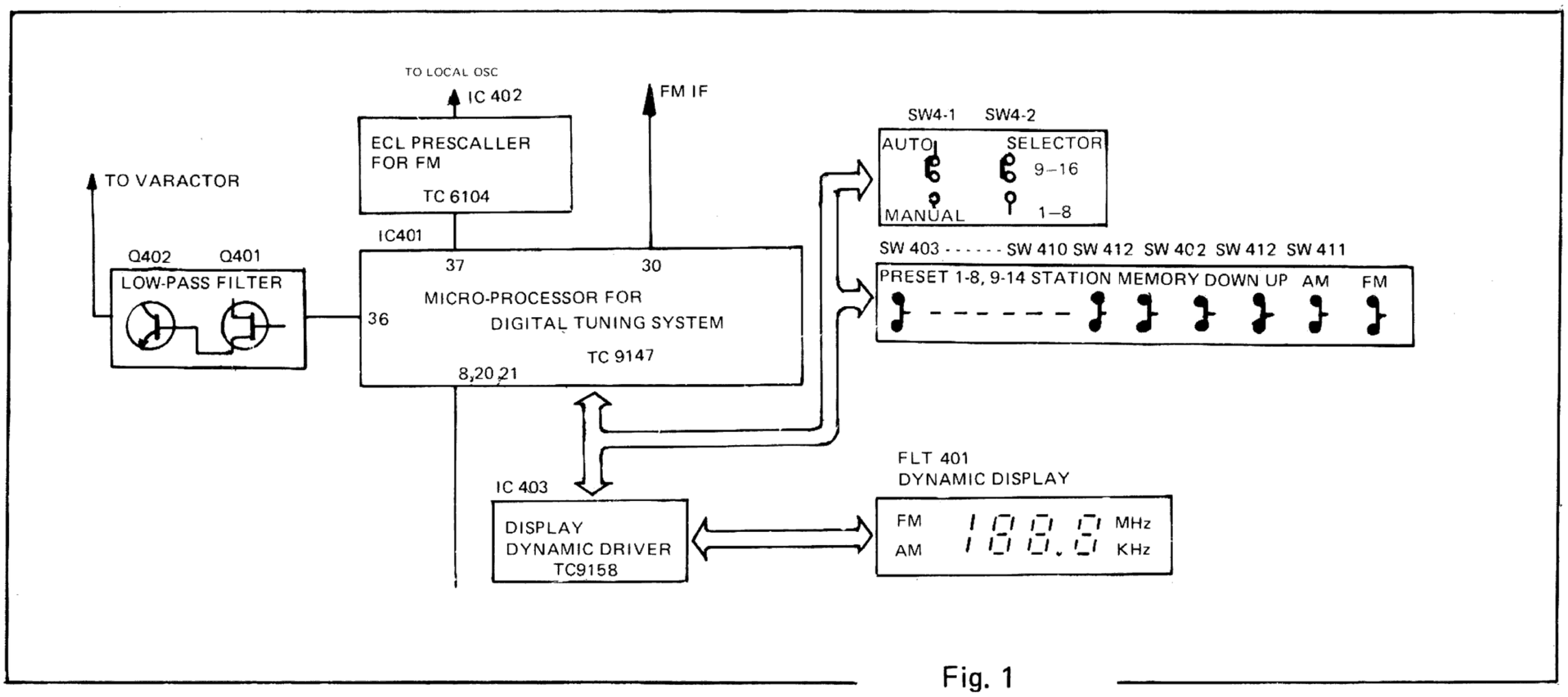

Fig. 1

3.2 Microcomputer TC9147

(1) Terminal Connections

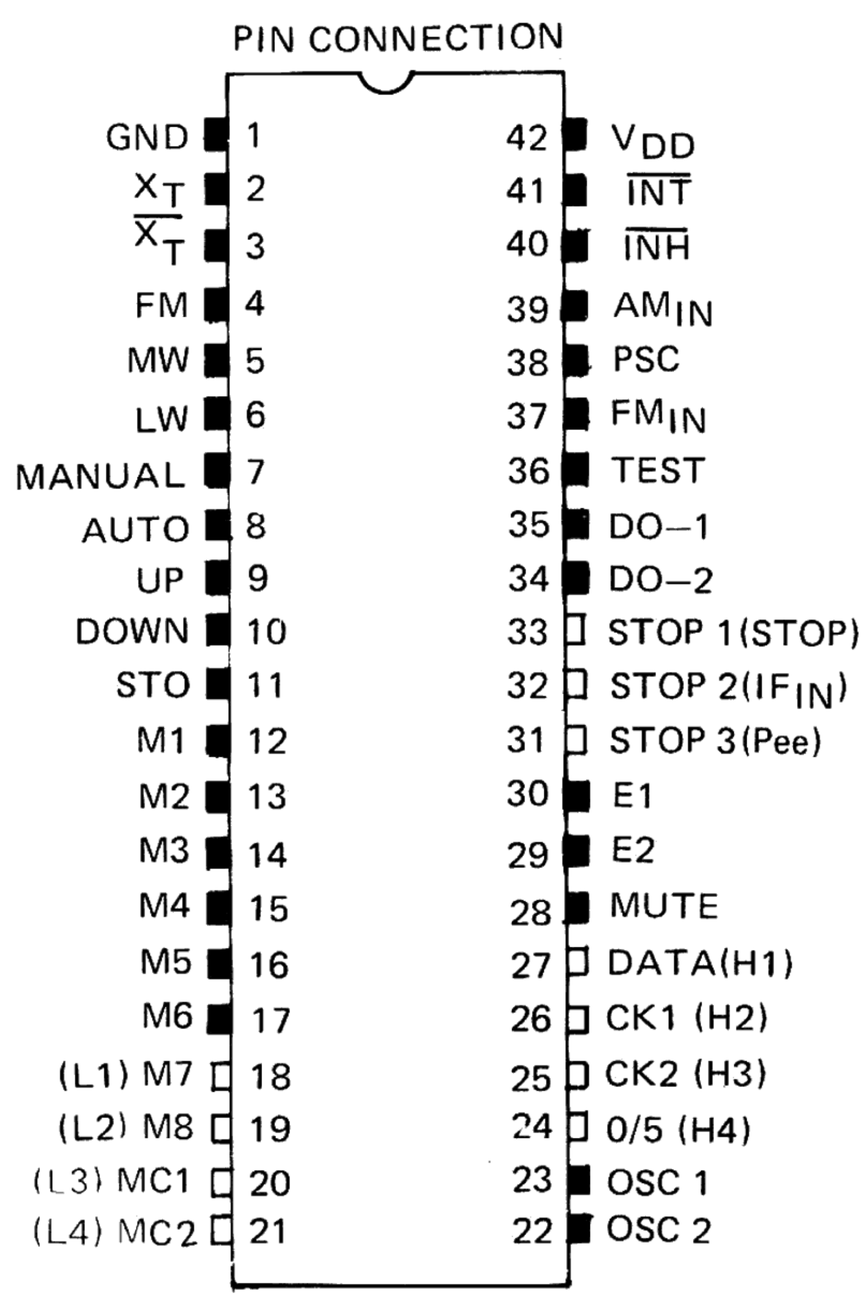

TERMINAL IS COMMON TO TC9146AP, TC9147P

TERMINAL: ( )DENOTES TERMINAL NAME OF TC9146

www.hifiengine.com

(2) Block Diagram-TC 9147

BLOCK DIAGRAM

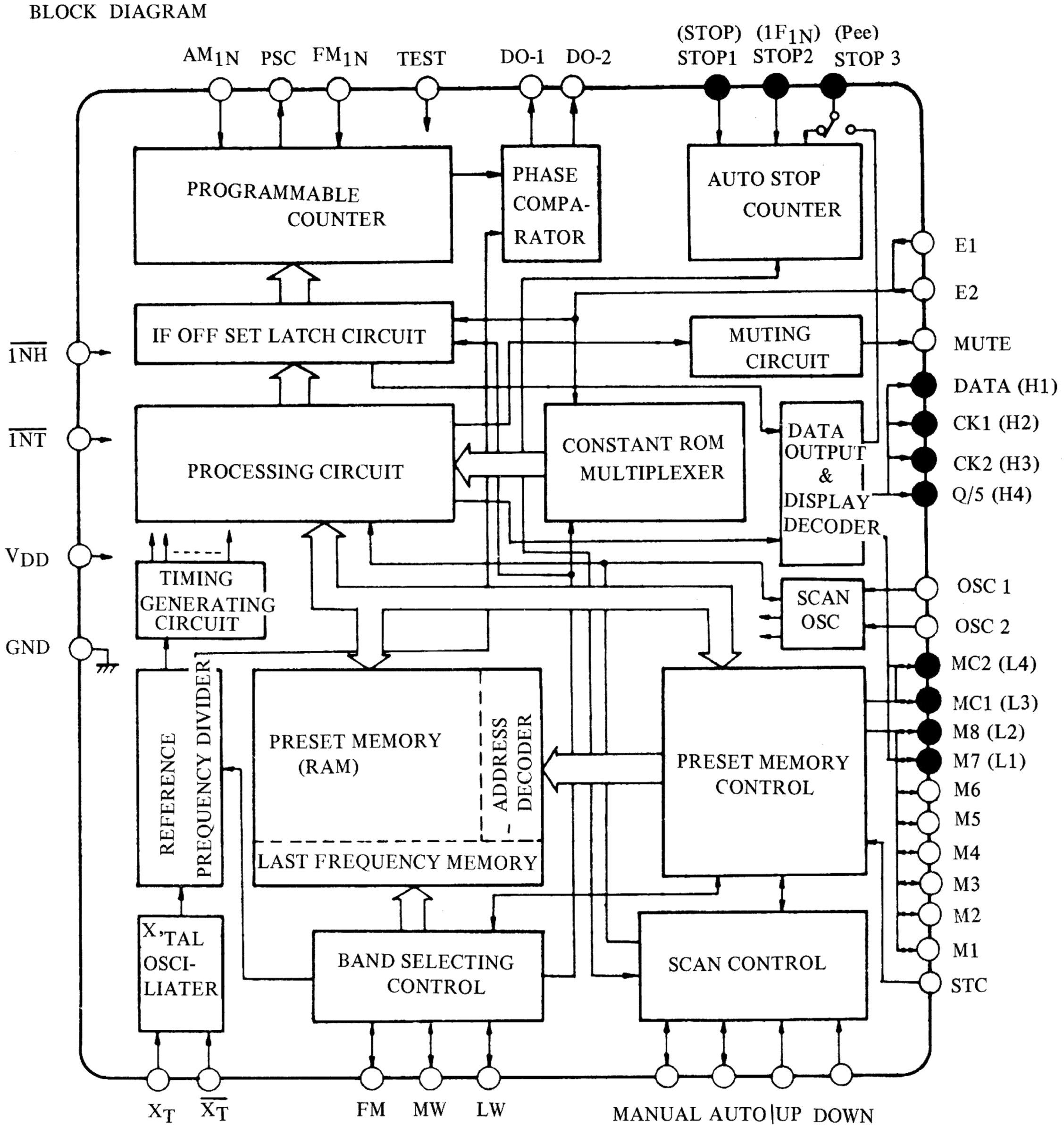

● ( ) of ● denotes terminal name of TC9146AP

○ denotes terminal common to TC9146AP/TC9147P

www.hifiengine.com

(3) Specification

MAXIMUM RATINGS (Ta=25°C)

Characteristic	Symbol	Ratings	Unit
Supply Voltage	V_{DD}	0~6	V
Input Voltage	V_{IN}	-0.3~V_{DD}+0.3	V
Output Voltage	V_{OUT}	-0.3~V_{DD}+0.3	V
Output Current (Note)	I_{OUT}	30	mA
Power Dissipation	P_D	800	mW
Operating Temperature	T_{opr}	-30~75	°C
Storage Temperature	Tstg	-55~125	°C

(Note) Bipolar transistor output current.

ELECTRICAL CHATACTERISTICS (Unless otherwise specified, Ta=25°C, V_{DD}=5.0V)

CHARACTERISTIC			SYMBOL	TEST CIR-CUIT	TEST CONDITION	MIN.	TYP.	MAX.	UNIT
Supply Voltage			V_{DD}		— *	4.5	5.0	5.5	V
Supply Current			I_{DD}		FM Band, f_{IN}=4MHz, No-Load	—	4.0	7.0	mA
Memory Backup Voltage			VDD B		INH=OV *	2.0	~	5.5	V
Inhibit Supply Current			I_{DD} I_1		V_{DD}=5.0V, INH=OV	—	—	15	μA
			I_{DD} I_2		V_{DD}=2.0V, INH=OV	—	—	5	
X tal Oscillation Frequency			$f_{X'tal}$		— *	—	7.2	—	MHz
FM_{IN}	Operating Frequency		$f_{IN(FM)}$		VIN=0.5V p-p, AC coupled *	2.0	~	5.5	MHz
	Input Amplitude		$V_{IN(FM)}$		f_{IN}=2.0~4.0 MHz, AC coupled *	0.5	~	V_{DD}-0.5	Vp-p
AM_{IN}	Operating Frequency		$f_{IN(AM)}$		V_{IN}=0.5Vp-p, AC coupled *	0.5	~	2.2	MHz
	Input Amplitude		$V_{IN(AM)}$		f_{IN}=0.5~2.2 MHz, AC coupled	0.5	~	V_{DD}-0.5	Vp-p
STOP 3 (IF_{IN})	Operating Frequency		$f_{IN(IF)}$		V_{IN}=0.5Vp-p, AC coupled	400	~	500	kHz
	Input Amplitude		$V_{IN(IF)}$		f_{IN}=400 ~ 500 kHz, AC coupled	0.5	~	V_{DD}-0.5	Vp-p
PSC	FM_{IN} Propagation Delay Time		t_{pd}		C_L=15pF, V_{IN}=0.5Vp-p	—	—	200	nS
	Max. Load Capacity		C_L		— *	—	—	15	pF
$\overline{INH}$ $\overline{INT}$	Input Voltage	"H" Level	V_{IH1}		—	4.2	~	V_{DD}	V
		"L" Level	V_{IL1}		—	0	~	3.0	
Other All Input I/O Terminals	Input Voltage	"H" Level	V_{IH2}		—	3.5	~	V_{DD}	V
		"L" Level	V_{IL2}		—	0	~	1.5	
UP, DOWN, TEST Input Pull-Down Resistance			R_{IN}		—	15	30	60	kΩ
FM_{IN}, AM_{IN}, STOP3 Feedback Resistance			R_f		—	200	400	800	kΩ
F1, 2, STOP1, 2, INH INT Input Leak Current			I_L		—	—	—	1.0	μA

FM, MW, MANUAL, AUTO, STO, (TC9147P: M1~M8)

Output Current	"H" Level	HO_I		V_{OH}=4.0V	15	20	—	mA
	"L" Level	I_{OL}		V_{OL}=5.0V	70	140	280	μA

OSC, MUTE, (TC9147P: DATA, CK1, 2, 0/5)

Output Current	"H" Level	I_{OH}		V_{OH}=4.0V	0.6	1.0	—	mA
	"L" Level	I_{OL}		V_{OL}=1.0V	0.6	1.0	—	mA

www.hifiengine.com

CHARACTERISTIC		SYMBOL	TEST CIR-CUIT	TEST CONDITION	MIN.	TYP.	MAX.	UNIT
DO-1, DO-2								
Output Current	"H" Level	I_{OH}		V_{OH}=4.0V	0.6	1.0	–	mA
	"L" Level	I_{OL}		VOL=1.0V	0.6	1.0	–	
Try state Leak Current		I_{TL}		–	–	–	0.1	μA
MC1, MC2 (TC9147P only)								
Output Current	"H" Level	I_{OH}		V_{OH}=4.0V	0.6	1.0	–	mA
	"L" Level	I_{OL}		V_{OL}=5.0V	70	140	280	μA

Note: Parameters with * mark are guaranteed at all conditions of V_{DD}=4.5~5.5V
Ta= -30~75°C.

(4) Function of Terminals

FUNCTIONAL EXPLANATION OF TERMINALS

Fin No.	Symbol	Terminal Name	Function	Remarks
2	X_T	Crystal Oscillator terminal	Connect a 7.2 MHz crystal for reference frequency.	With a built in feedback resistor
3	$\overline{X_T}$			
4	FM	FM band designating input	Mutual reset type for selecting FM/MW/LW bands	
5	MW	MW band designating input		A
6				
7	MANUAL	Manual tuning mode designating input	Mutual reset type for selecting manual and auto search operating modes at time of UP/DOWN tuning	A
8	AUTO	Auto search tuning mode designating input		
9	UP	Up operating key input	For UP/DOWN tuning with the push key connected	B
10	DOWN	DOWN operating key input		
11	STO	Memory store command input	The preset memory is set to write state by this input	A
12 ~ 19	M 1 ~ M 8	Preset memory channel designating input	In combination with MC1 and MC2 inputs, controls write/read of the internal 16 channel preset memory.	A
20	MC1	Memory control input	Used for setting the 16 channel preset memory either to FM/AM (MW+LW) 8 channel fixed system or FM+MW+LW 3 bands 16 channel random system	C
21	MC2			
22	OSC2	AM oscillator terminal	C.R terminal for oscillator that decides SCAN speed at time of AM search.	–
23	OSC1	FM oscillator terminal	C.R terminal for oscillator that decides SCAN speed at time of FM search.	–

www.hifiengine.com

Fin No.	Symbol	Terminal Name	Function	Remarks
24	0/5	FM 50kHz output for Europe	50kHz step output in FM band in European region. Become "H" level at 50 kHz.	D
25	CK2	Receiving frequency data serial outputs	Transmits serial data and timing clock to be sent to Receiving Frequency Digital Display Driver TD6301AP. CK1 output also serves for pee sound transmission.	D
26	CK1			
27	DATA			
28	MUTE	Muting signal output	This terminal is placed at "H" level at time of muting output	D
29	E2	Region Designating output	For designating Japan, U.S.A and Europe.	E
30	E1			
31	STOP3	AM-IF signal input	Stops auto search by counting IF 450 kHz signal at time of AM.	F
32	STOP2	Auto search stop signal input	When a "H" level signal is input under the state where a "H" level signal is being given to stop1 Input, stops Auto search.	E
33	STOP1	SCAN speed slow input	When a "H" level signal is input, reduce auto search scan speed to 1/2.	E
34	DO-2	Phase Comparator output	2 try state buffers are transmitted parallelly from one phase comparator.	G
35	DO-1			
36	TEST	Test Terminal	When a "H" level signal is input, this terminal is placed at test mode.	B
37	FM_{IN}	FM Programmable counter input	Output from prescaler TD6104P is connected.	F
38	PSC	Prescaler control output	Controls selection of 1/30 and 1/32 division of prescaler TD6104P	D
39	AM_{IN}	AM programmable counter input	AM local oscillation signal is applied	F
40	$\overline{INH}$	Inhibit input	Normal operation at "H" level and inhibit status at "L" level.	E
41	$\overline{INT}$	Initialize input	Normal operation at "H" level, and internal state is initialized at "L" level.	E
42	V_{DD}	Power terminals	Apply 5±0.5V. Backup is possible up to 2V.	–
1	GND			

www.hifiengine.com

3.3 Explanation of Operation

PLL UNIT

1. REFERENCE FREQUENCY AND CRYSTAL OSCILLATOR

Oscillation frequency from the crystal oscillator is divided to generate reference frequency of 25kHz at time of FM, 9 or 10kHz at MW.

- Crystal oscillation frequency is 7.2 MHz
- The crystal oscillator has a built-in self-bias amplifier and can be composed easily only by connecting a crystal and a capacitor as shown in the following diagram. Further, oscillation is stopped under the inhibit state.

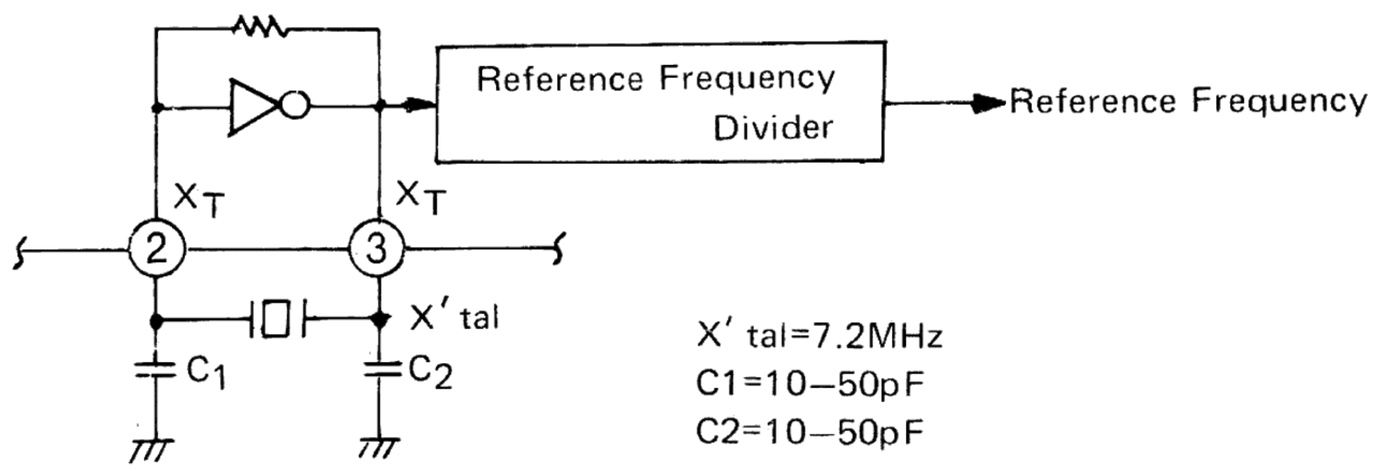

* A crystal that has a low CI value and excellent starting

Mode	Reference Frequency	Remarks
FM	25 kHz	at FM band
MW 9	9 kHz	at MW 9kHz separation
MW 10	10 kHz	at MW 10kHz separation

2. PROGRAMMABLE COUNTER

The programmable counters for FM and AM (MW) are in different circuit configuration.

1) FM Programmable Counter

The FM programmable counter is of swallow count type in combination with TD6104P. As a result, reference frequency 25 kHz is obtained and performance is improved.

The following diagram shows the connection with prescaler TD6104P.

In this case, the transmission delay time of PSC output for controlling TD6104P is limited.
Therefore, wiring for this PSC output should be as short as possible. PSC transmission delay time td<250 ns.

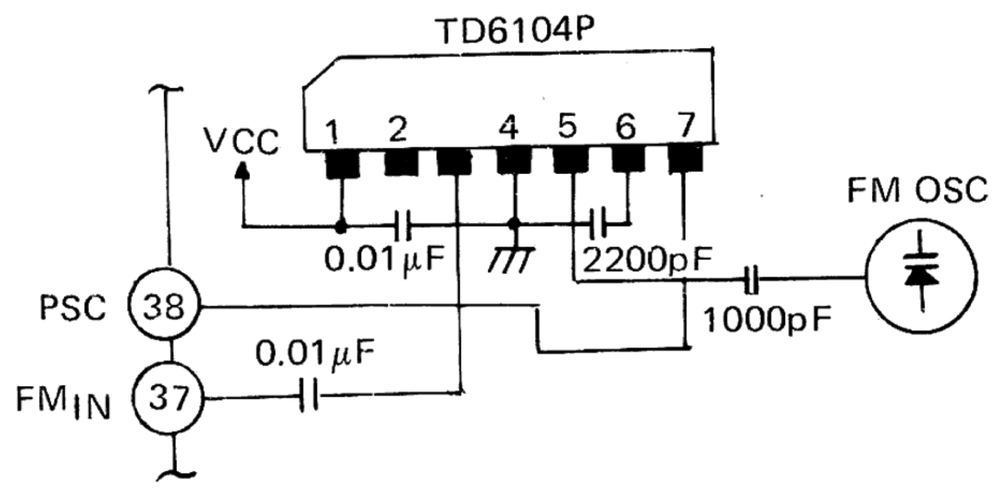

2) AM Programmable Counter

The AM (MW) programmable counter is of direct division type.

The signal transmitted from AM channel can be directly input to AM_{IN} terminal.

www.hifiengine.com

3. PHASE COMPARATOR

The phase comparator is a unit that compares phases of reference frequency and programmable counter output and controls V_{CO} through the low pass filter so that thus two signal frequencies and phases agree each other.

- Two tri-state buffers DO-1 and DO-2 are transmitted parallely from one phase comparator. Because of this, two sets of low-pass filter can be used without necessity for switching them.
- Under the inhibit state, both DO-1 and DO-2 outputs are kept at "L" level.

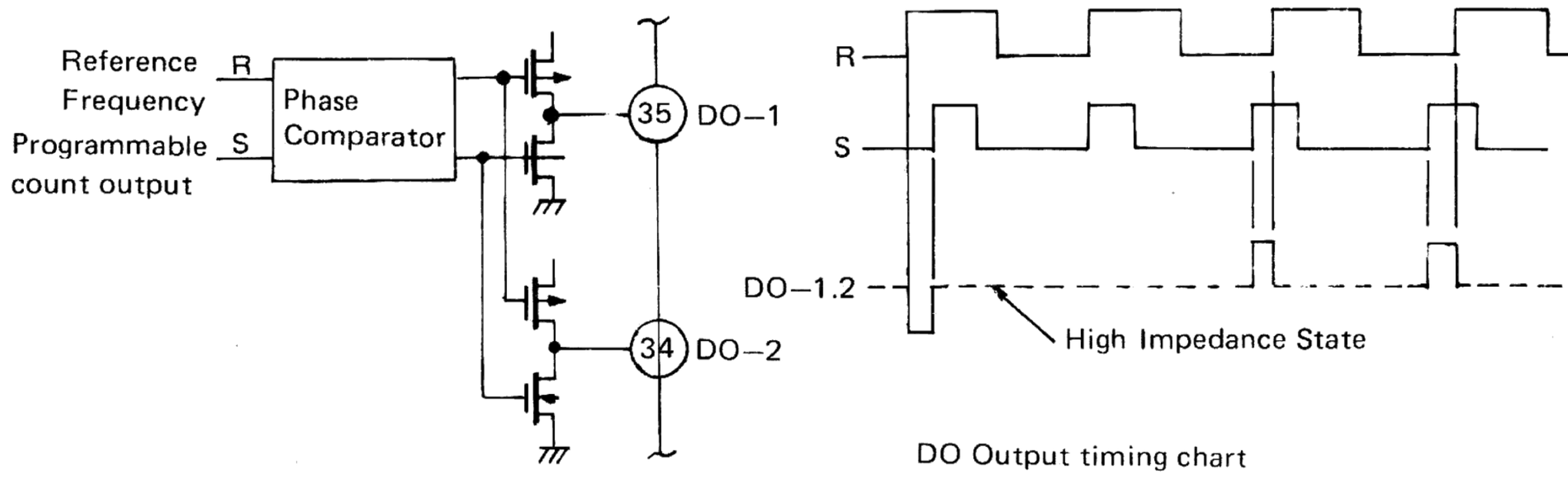

* DESIGNATION OF DESTINATION BY JAPAN, U.S.A. AND EUROPE

Regional designation by U.S.A. and Europe is made by E1 and E2 terminals.

E1	E2	Destination	
1	0	Korea	
1	0	Europe	
0	1	U.S.A.	MW 9 kHz separation
1	1		MW 10 kHz separation

- For U.S.A region designation, AM(MW) band 9kHz/10 kHz separation can be selected.
- When the $\overline{INH}$ terminal is placed at "L" level, E1 and E2 Inputs inhibit read operation and keep the previous state.

www.hifiengine.com

3.4 Dynamic Display Driver (TC 9158)

TC9158P is a dynamic driver for receiving frequency display developed for Model DTS-6/8.

This unit latches serial data transferred from system controller and dynamically displays the data by performing compensation operation of intermediate frequency.

Since the output circuit contains a driver, no external transistors are required.

- Display of dynamic system affords simplification of wire.
- TC9158P contains transistor for high resisting voltage; therefore, this unit can drive FL directly.
- Numbers of display digits are 4 digits and a half up to 19995 at maximum and mark display (FM, MW) are possible.
- Data transfer from system controller can be made through connection of three wires because of serial system.
- Outline is a 18 pin DIP.

ELECTRICAL CHARACTERISTICS

Characteristics	Symbol	Test Condition	Min.	Typ.	Max.	Unit
Operating Supply Voltage Range	V_{DD}		4.0	–	6.0	V
Operating Supply Current	I_{DD}	$V_{DD=5V}$ open load	–	–	1.0	mA
Driver Output Voltage	V_{OL}	TC9158P All output pins	–	–	–40	V
Driver Output Current	I_{OH}	TC9158P Digit output $V_{DS=2V}$	5	–	–	mA
		TC9159P All output pins $V_{CE=1V}$	30	–	–	

APPLICATION CIRCUIT

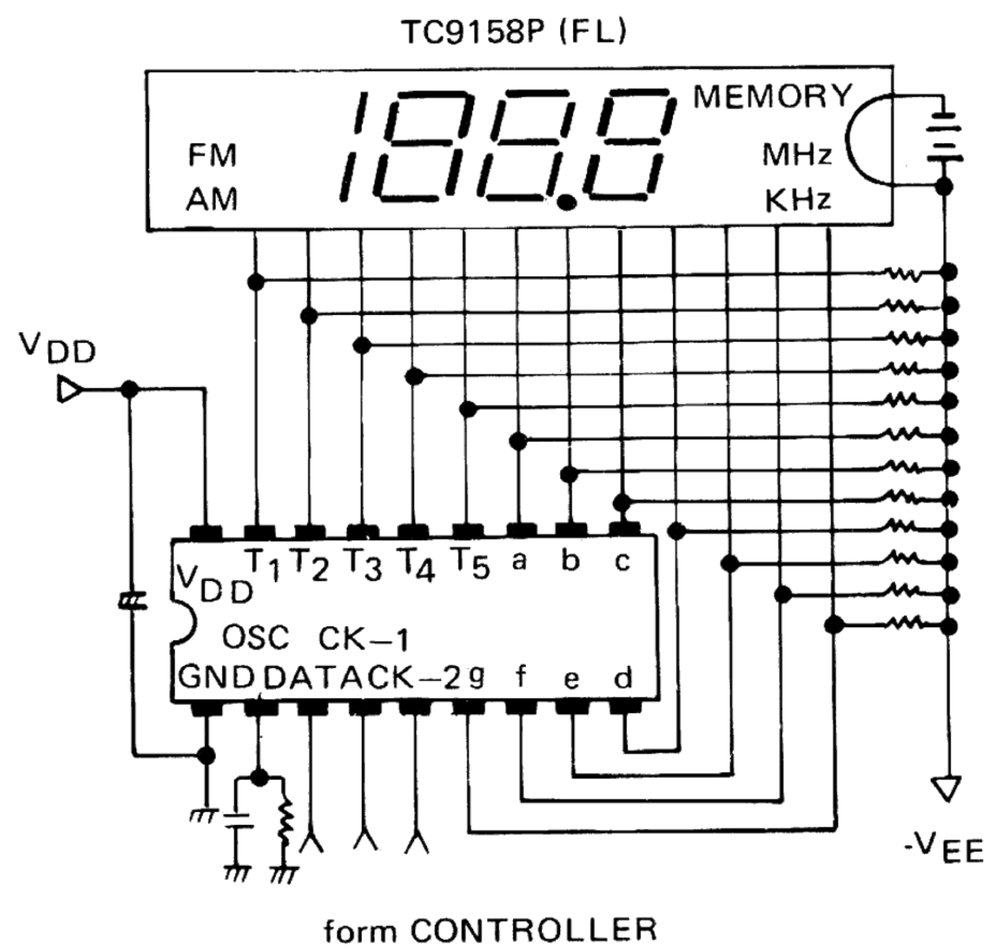

www.hifiengine.com

4. FM Alignment Procedures (Selector switch in the "FM" position and mode/mute switch in the "Mute OFF" position)

4.1FM Local Oscillator Alignment

Step	Signal Source Connection	Signal Frequency	Indicator Connection	Set the Digital Read out Frequency to:	Adjust:
1			DC Volt meter in 11.5V and 3.9V range to Point (TP6) (TP7,GND)	108.00MHz	Not Adjustable 11.5V
2				87.50MHz	L 3 for 3.9V
3	Repeat steps 1 and 2				

4.2 FM RF and Muting Circuit Alignment

Step	Signal Source Connection	Signal Frequency	Indicator Connection	Set the Digital Read out Frequency to:	Adjust:
1	RF generator to FM antenna terminals through matching network (300 ohms balanced) (Maintain RF level below limit)	106.10MHz	VTVM to L or R Channel output (TAPE output)	106.10MHz	Not Adjustable
2		90.10MHz		90.10MHz	T1, L1, L2 for maximum output and minimum distortion
3	Repeat steps 1 and 2				
4	RF generator to FM antenna terminals through matching network (300 ohms balanced) (Maintain RF level below limit)	98.10MHz	VTVM to L or R Channel output (TAPE output)	98.10MHz	T2 for maximum output and minimum distortion
5		98.10MHz	"O" Center Meter or DC current meter in 100uA range to point (TP1 and TP2)		T501 Core so that the meter indicates center or may read "O"
6	RF generator 1mV output to FM antenna terminals through maching network (300 ohms, balanced)	98.10MHz	Distortions meter to L or R Channel output (TAPE OUT)	98.10MHz	T502 core for minimum distortion
7	RF generator 300uV				VR501 so that TUNE LED may light. MUTE ON

www.hifiengine.com

4.3 Multiplex Alignment Procedures ("FM" Position, Mute on Position)

Step	Signal Source Connection	Signal Frequency	Indicator Connection	Set the Digital Read out Frequency TO:	Adjust:
1	RF generator to FM antenna terminals through matching network (300 ohms balanced) with 1mV FM Stereo Generator RF level and Pilot 9% modulation	No modulation & Pilot off	Frequency counter to point (TP 5)	98.10MHz	VR601 so that Frequency counter may precisely read 38KHz
2	RF generator to FM antenna terminals through matching network (300 ohms balanced) with 1mV	Stereo left (1,000Hz)	VTVM to right channel output (TAPE OUT)	98.10MHz	VR601 for maximum output and same separation in both channels
3	FM Stereo Generator RF level and 100% modulation (Pilot 9%)	Stereo right (1,000Hz)	VTVM to left channel output (TAPE OUT)		
4	Repeat step 2 and 3				

4.4 AM ALIGNMENT Procedures (Selector Switch in the "AM" Position)
AM Local Oscillator Alignment

Step	Signal Source Connection	Signal Frequency	Indicator Connection	Set the Digital Read out Frequency TO:	Adjust:
1			DC Volt meter in 8.6V and 1V range to point (TP6, TP7; GND)	1710KHz	TC501 for 8.5V
2				520KHz	T505 for 1V
3	Repeat seep 1 and 2				

4.5 AM IF Alignment

Step	Signal Source Connection	Signal Frequency	Indicator Connection	Set the Digital Read out Frequency TO:	Adjust:
1	Sweep generator to point (C527)	450KHz marker	Oscilloscope to point (TP3)	Quiet point on band	T503 for maximum and symetric response

www.hifiengine.com

4.6 AM RF Alignment

Step	Signal Source Connection	Signal Frequency	Indicator Connection	Set the Digital Read out Frequency TO:	Adjust:
1	Apply the signal to the AM loop antenna from the RF generator	1400KHz	VTVM to L or R channel output	1400KHz	TC502 for maximum output
2	Using the test loop. As per Figure 2. (with 3mV/M)	600KHz	(TAPE OUT)	600KHz	T504 for maximum output
3	Repeat step 1 and 2 necessary to obtain maximum sensitivity.				
4		1000KHz		1000KHz	VR502 so that TUNE LED may light

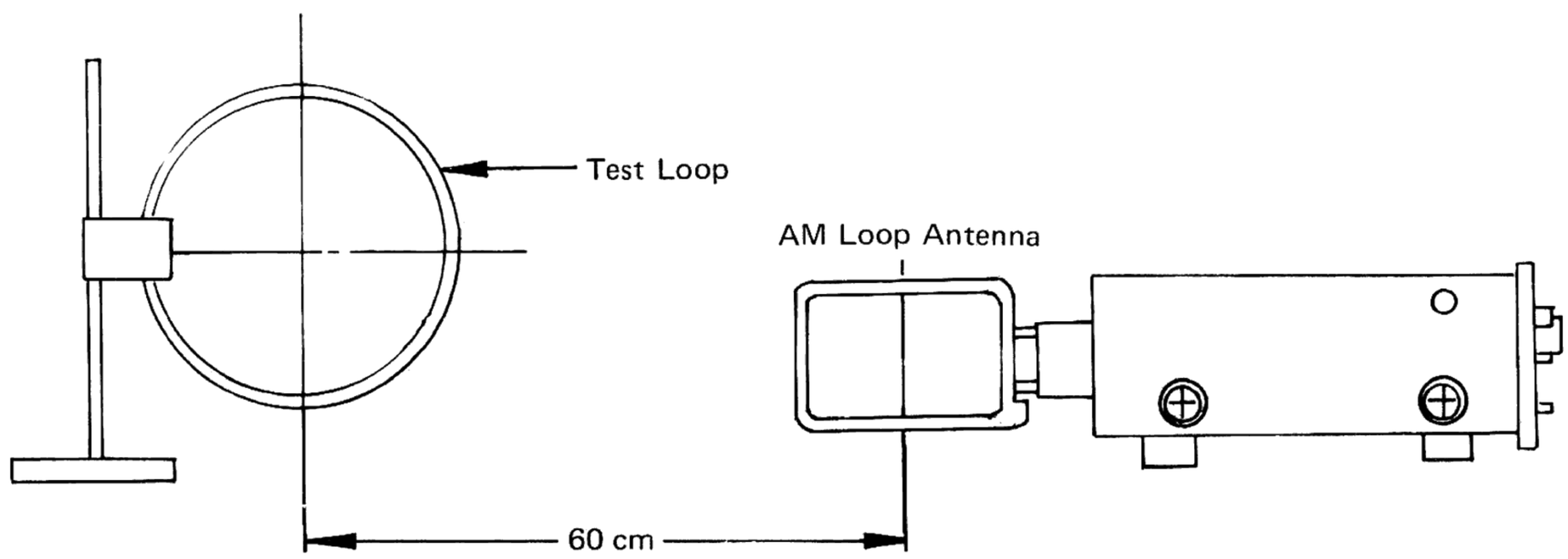

Figure 2

www.hifiengine.com

5. FUNCTIONAL BLOCK DIAGRAM

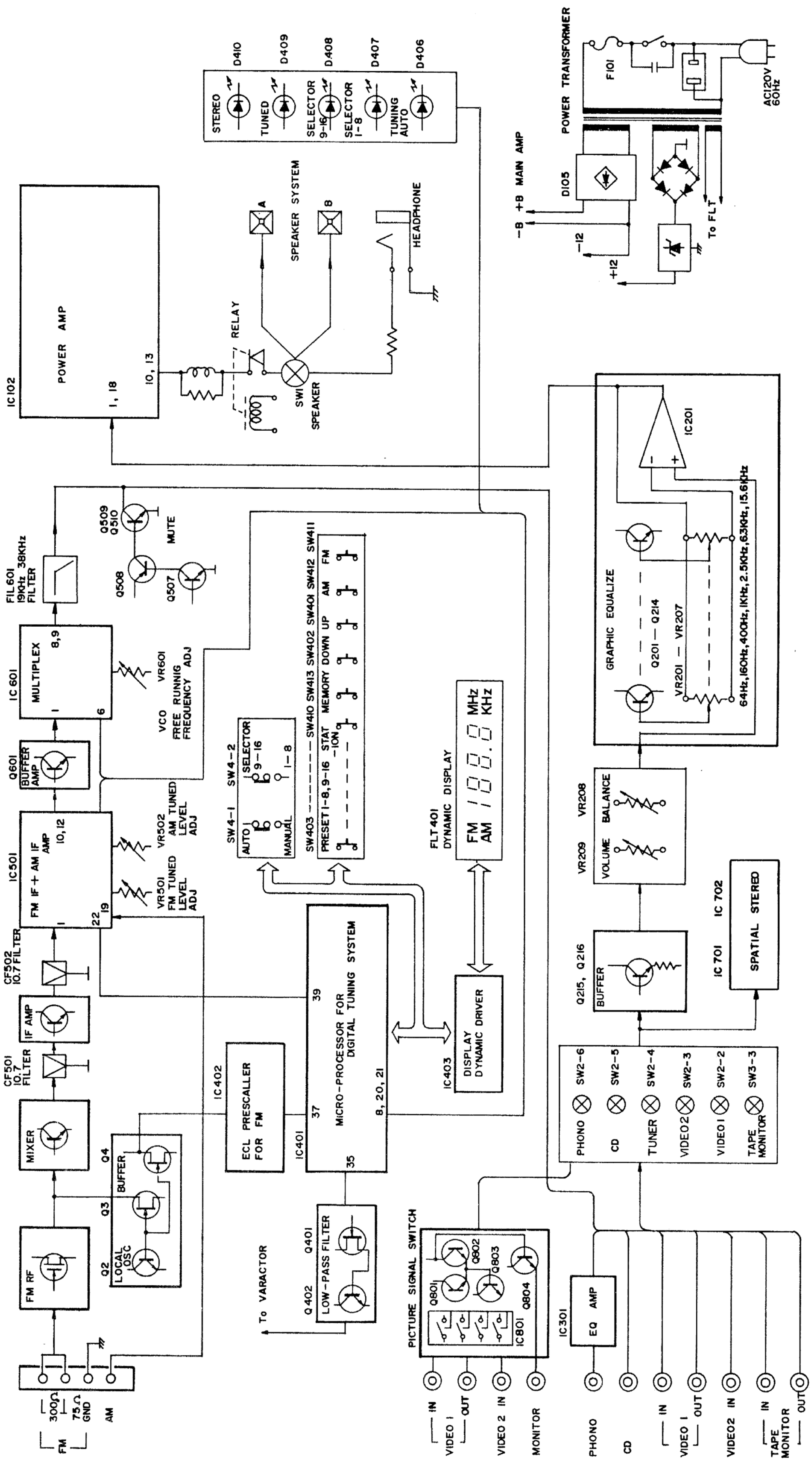

6. DIAGRAM AND COMPONENT LOCATIONS

6-1. MAIN (TUNER/AMP) P.W.B ASS'Y (P100)

Schematic Diagram and Component Locations

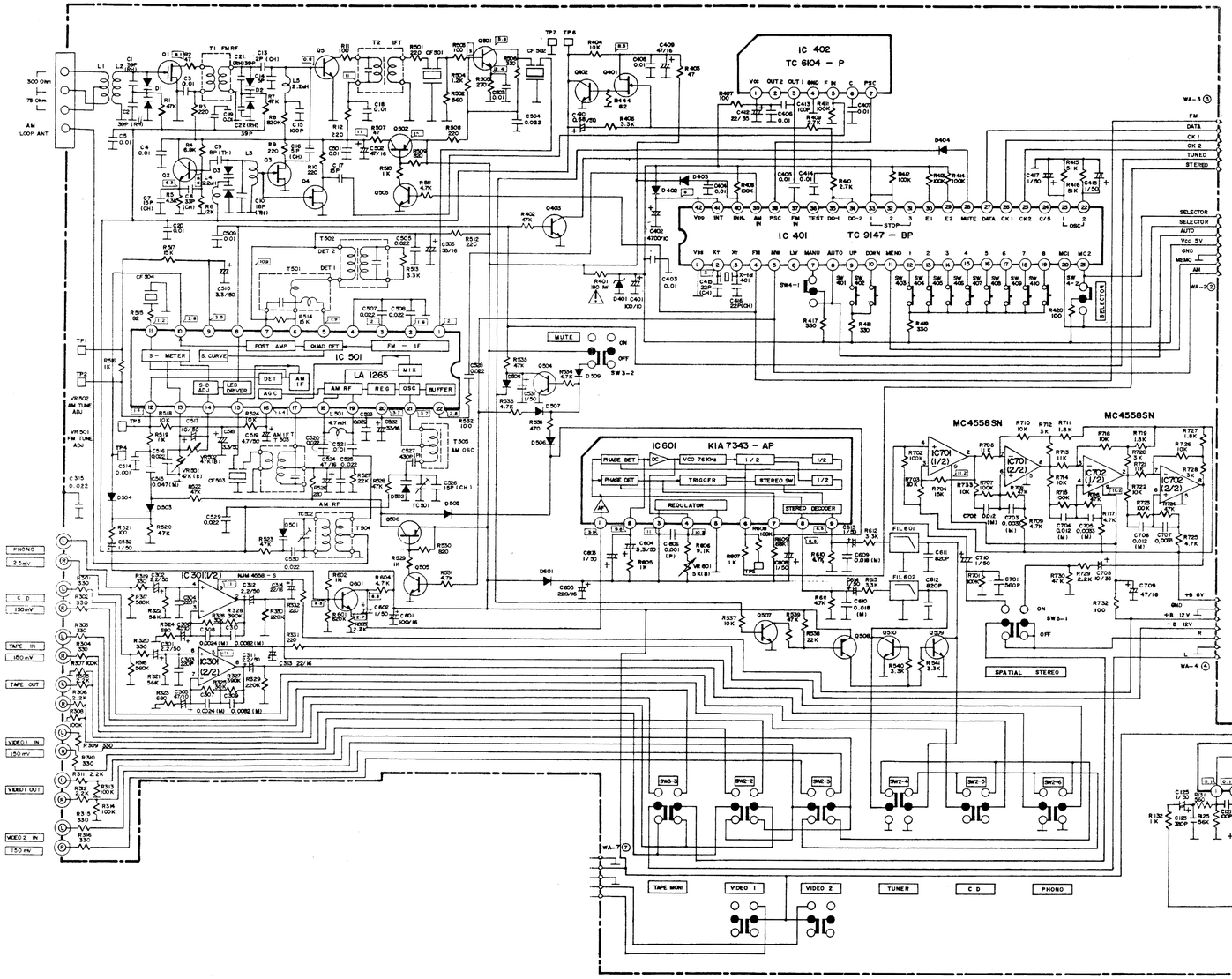

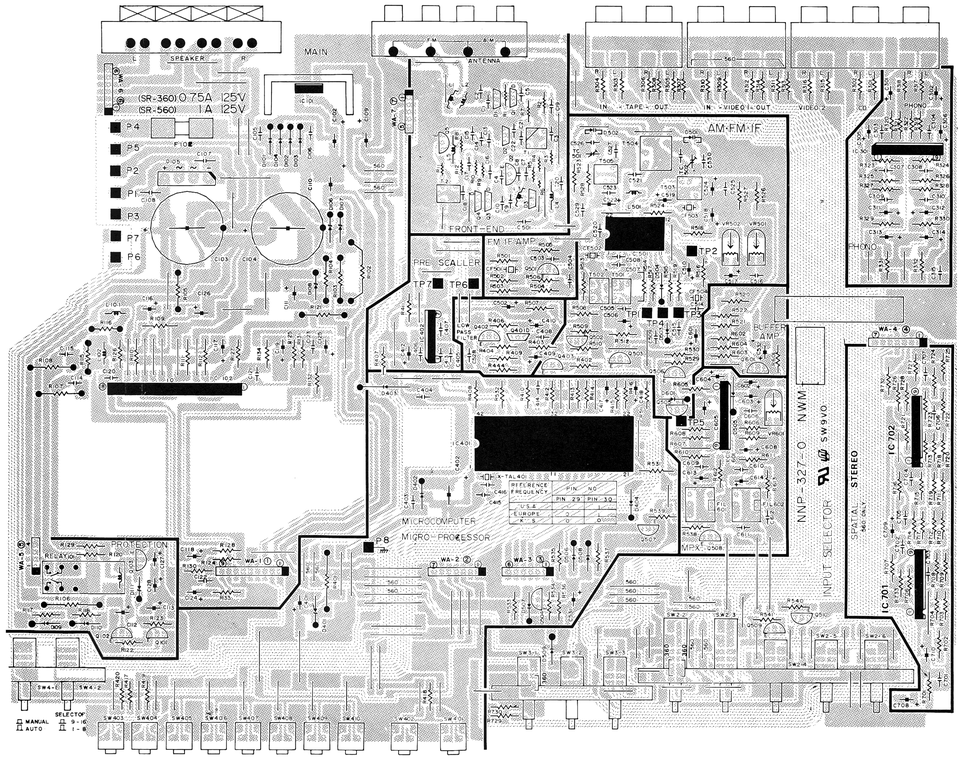

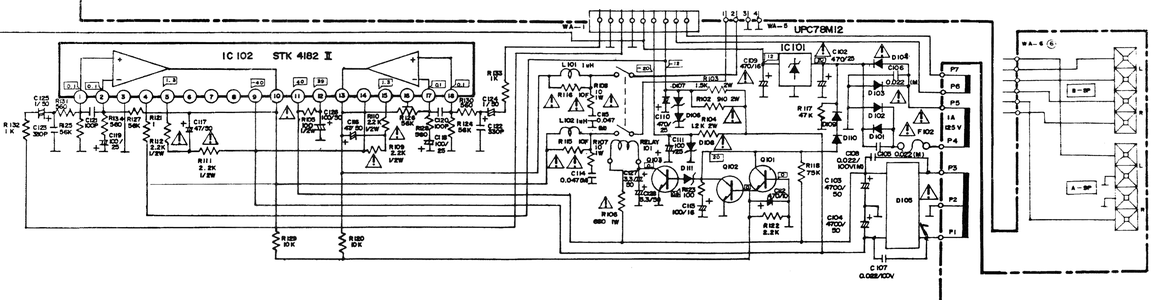

6-2. CONTROL P.W.B ASS'Y (P500)
Schematic Diagram and Component Locations

6-2-1. *GRAPHIC EQ/VOLUME/FLT DRIVER ASS'Y (P500)
Schematic Diagram and Component Locations

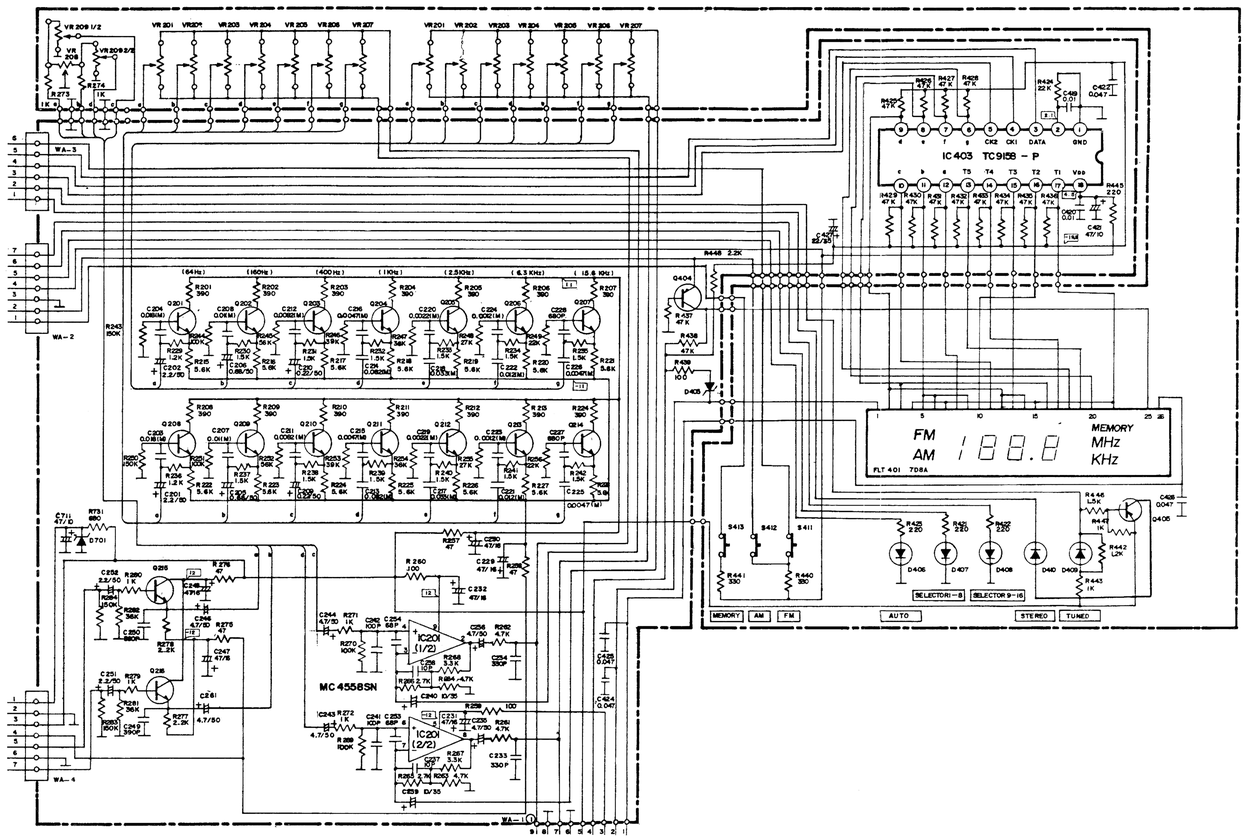

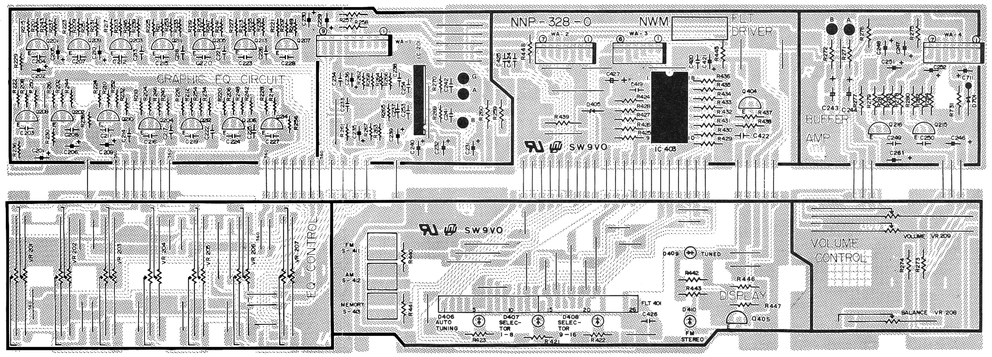

6-2-4. *VIDEO ASS'Y (501)
Schematic Diagram and Component Locations

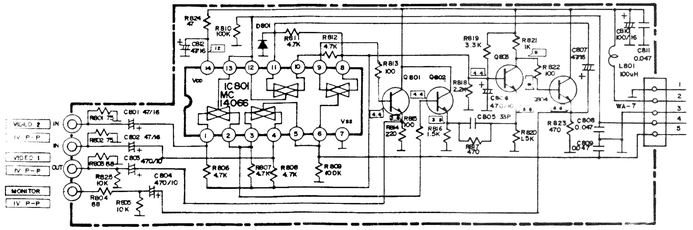

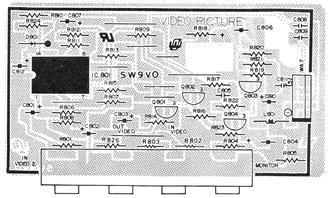

6-2-2. *SPEAKER SWITCH ASS'Y (P503)
Schematic Diagram and Component Locations

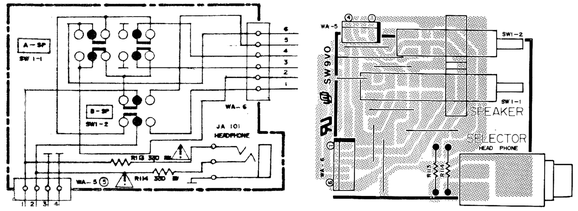

6-2-3. *POWER SWITCH ASS'Y (P502)
Schematic Diagram and Component Locations

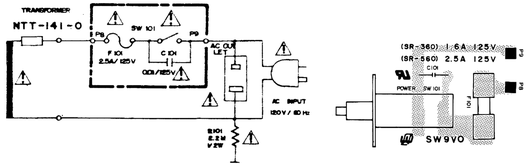

7 EXPLODED VIEW AND PART LIST.

7.1 FRONT PANEL

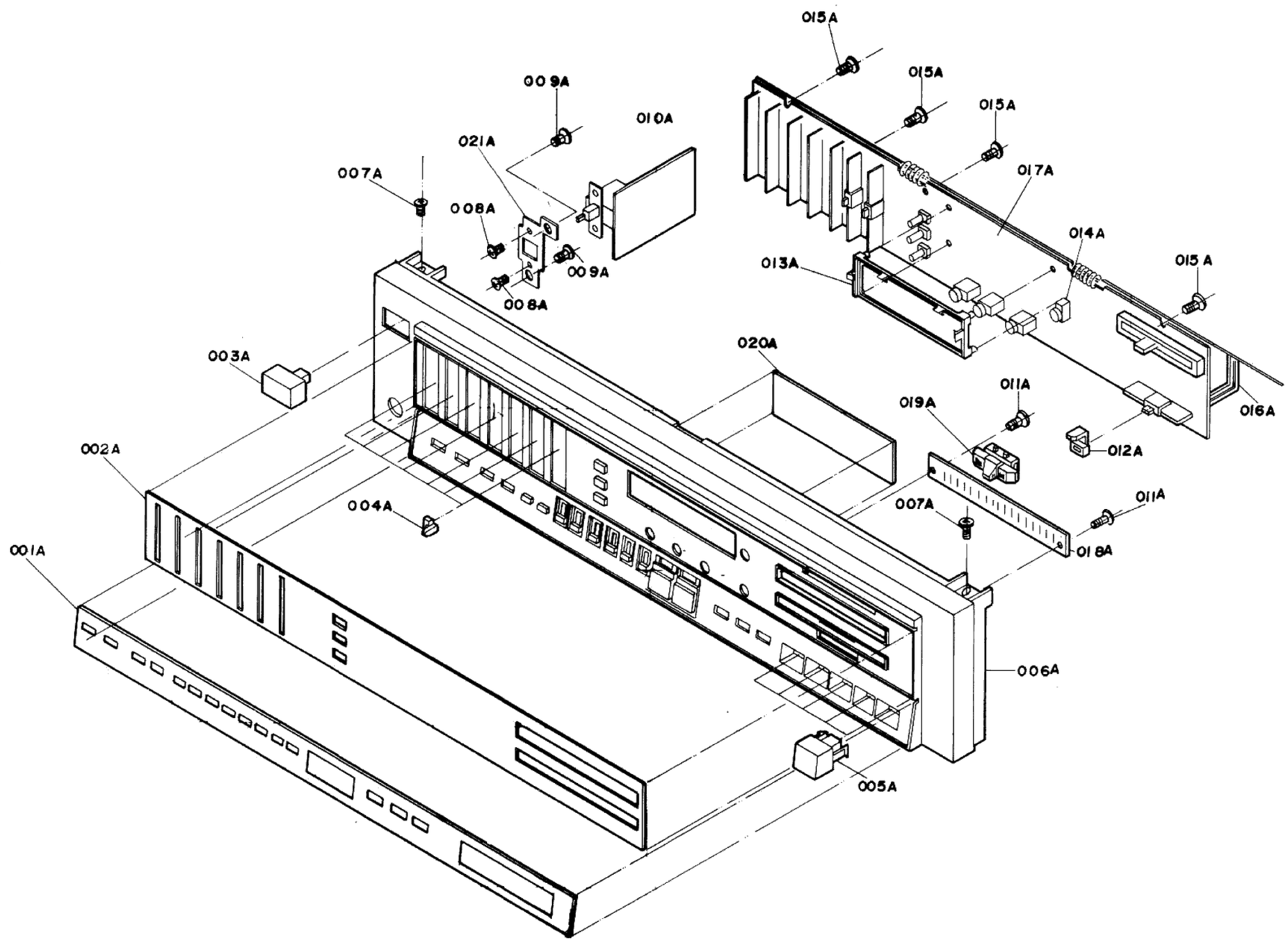

REF. DESIG.	Q'TY	PART NO.	DESCRIPTION
A	1	NNW-1004-B	Front Panel Ass'y
001A	1	NNC-096	AL Plate
002A	1	NNA-313	Front Window
⚠003A	1	NNW-995	Power Knob
⚠004A	7	NNW-1001	EQ Knob
⚠005A	5	NNW-1000	Function Knob
006A	1	NNW-1004	Front Panel
007A	2	VBZ30P060K	Screw
008A	2	VMZ30P060K	Screw
009A	2	VBZ30P060K	Screw
010A	1	NSG-108	Power S/W Ass'y
011A	2	BRZ26P060K	Screw
⚠012A	1	NNW-1002	Balance Knob
⚠013A	1	NNW-997	F.L.T Holder
⚠014A	5	NNW-994	L.E.D Holder

REF. DESIG.	Q'TY	PART No.	DESCRIPTION
015A	4	VBZ30P060K	Screw
⚠016A	3	NNW-993	P.C.B Joint
017A	1	NWM-135	Control P.C.B. Ass'y
⚠018A	1	NNW-996	V.R Guide
⚠019A	1	NNW-992	V.R Knob
020A	1	NNM-060	Filter-Blue
021A	1	NNA-321	Power S/W Brk't

www.hifiengine.com

7.2 MAIN CHASSIS AND REAR PANEL

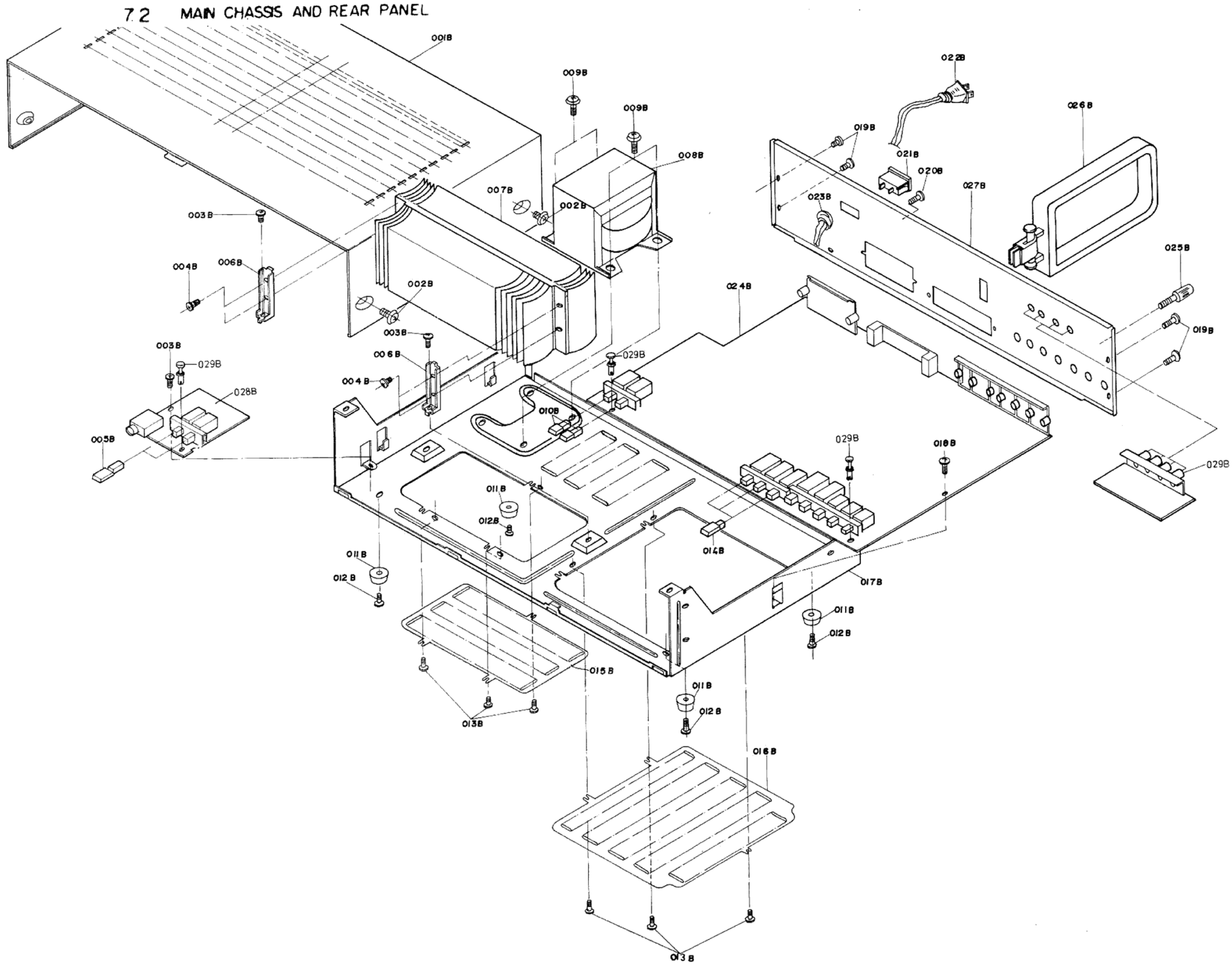

REF. DESIG.	Q'TY	PART NO.	DESCRIPTION
B		NNA-317-B	Main Chassis Ass'y
001B	1	NNA-316	Bonnet Case
002B	4	ATX40P060K	Screw
003B	3	VBZ30P060C	Screw
004B	4	VBZ30P060K	Screw
005B	2	NNW-1003	Push Knob (S)
006B	2	NNA-315	Heat Sink Brk't
007B	1	NNA-318	Heat Sink
008B	1	NTT-141	Power Trans
009B	2	VBZ40P060C	Screw
010B	3	NNW-998	Push Knob A
011B	4	NNV-005	Foot
012B	4	VBZ30P080K	Screw
013B	6	VBZ30P040C	Screw
014B	3	NNW-999	Push Knob B
015B	1	NNA-320	Bottom Plate-B

REF. DESIG.	Q'TY	PART NO.	DESCRIPTION
016B	1	NNA-319	Bottom Plat-A
017B	1	NNA-317	Main Chassis
018B	1	VBZ30P060C	Screw
019B	4	VBZ30P060C	Screw
020B	1	VBZ30P060C	Screw
⚠021B	1	NKP-062	AC OUTLET
⚠022B	1	NDG-023	Power Supply Cord
⚠023B	1	3113401-01	Strain Relief Bushing
024B	1	NWM-138	Main P.C.B. Ass'y
025B	1	NKE-005	Earth Terminal
026B	1	NDH-44	Loop Antenna Ass'y
027B	1	NNA-311	Rear Panel
028B	1		Speaker S/W Ass'y
029B	3	NEC-040	NY LON RIVET
030B	1		VIAEO ASS'Y

www.hifiengine.com

7.3 PACKING MATERIALS

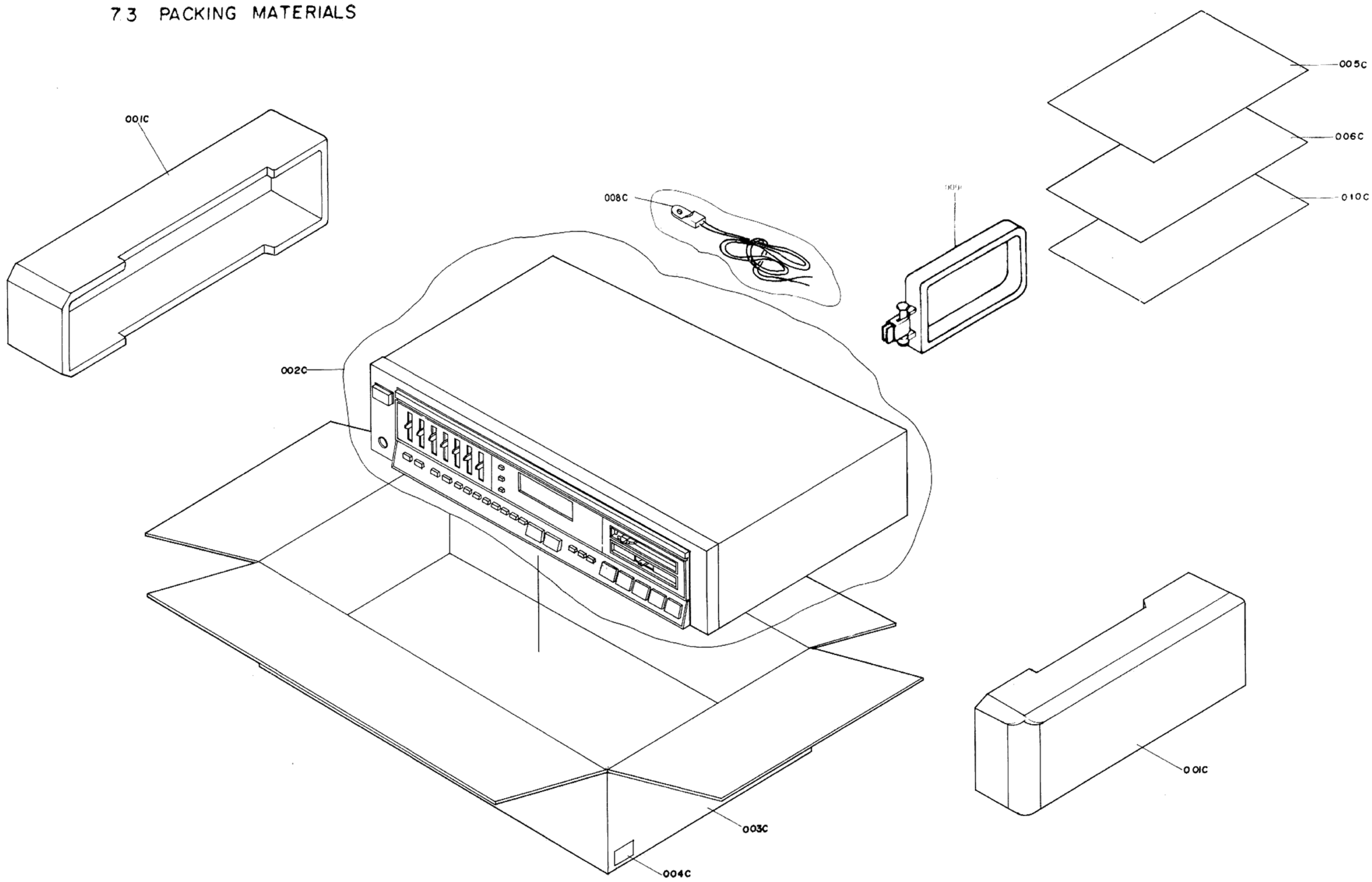

REF. DESIG.	Q'TY	PART NO.	DESCRIPTION
001C	2	NHA-278	Side PAD
002C	1	NEG-001	Poly Sheet
003C	1	NHG-266	Packing Case
004C	1		SERIAL NO
005C	1	NRY-013	Warrant Card
006C	1	NRB-018	Operation Manual
008C	1	NDH-005	FM Antenna
009C	1	NDH-044	Loop Antenna Ass'y
010C	1	364040901	Technical Specification

REF. DESIG.	Q'TY	PART NO.	DESCRIPTION

www.hifiengine.com

REF. DESIG.	PARTS NO.	DESCRIPTION
		P100-TUNER/PHONO, AMP CIRCUIT BOARD
P100	NNP-327-01	P.W. Board, Tuner/Phono Amp
	NWM-134-01	P.W. Board Assembly
		P100-CAPACITOR
C1	184639041	Ceramic 39 pF ±5%
C2	184639041	Ceramic 39 pF ±5%
C3	175610395	Ceramic 0.01 μF +80% −20%
C4	175610395	Ceramic 0.01 μF +80% −20%
C5	175610395	Ceramic 0.01 μF +80% −20%
C7	180615045	Ceramic 15 pF ±5%
C8	180633045	Ceramic 33 pF ±5%
C9	186608041	Ceramic 8 pF ±5%
C10	186618041	Ceramic 18 pF ±5%
C13	180602045	Ceramic 2 pF ±5%
C14	188605045	Ceramic 100 pF ±5%
C15	188610145	Ceramic 100 pF ±5%
C16	180605045	Ceramic 5 pF ±5%
C17	188615045	Ceramic 15 pF ±5%
C18	175610395	Ceramic 0.01 μF +80% −20%
C19	175610395	Ceramic 0.01 μF +80% −20%
C20	175610395	Ceramic 0.01 μF +80% −20%
C21	184639041	Ceramic 39 pF ±5%
C22	184639041	Ceramic 39 pF ±5%
C102	142447161	Elect 470 μF 25V
⚠ C103	142647261	Elect 4700 μF 50V
⚠ C104	142647261	Elect 4700 μF 50V
C105	150922341	Film 0.022 μF ±5%
C106	150922341	Film 0.022 μF ±5%
C107	150922341	Film 0.022 μF ±5%
C108	150922341	Film 0.022 μF ±5%
C109	142347165	Elect 470 μF 16V
C110	142447161	Elect 470 μF 25V
C111	142410165	Elect 100 μF 25V
C112	142247165	Elect 470 μF 10V
C113	142310165	Elect 100 μF 16V
C114	150647341	Film 0.047 μF ±5%
C115	150647341	Film 0.047 μF ±5%
C116	142647065	Elect 47 μF 50V
C117	142647065	Elect 47 μF 50V
C118	142410165	Elect 100 μF 25V
C119	142410165	Elect 100 μF 25V
C120	188610145	Ceramic 100 pF ±5%
C121	188610145	Ceramic 100 pF ±5%
C122	188633145	Ceramic 330 pF ±5%
C123	188633145	Ceramic 330 pF ±5%
C124	142601065	Elect 1 μF 50V
C125	142601065	Elect 1 μF 50V
C126	142610165	Elect 100 μF 50V
C127	142633965	Elect 3.3 μF 50V
C128	142633965	Elect 3.3 μF 50V
C301	142622965	Elect 2.2 μF 50V
C302	142622965	Elect 2.2 μF 50V
C303	188622145	Ceramic 220 pF ±5%
C304	188622145	Ceramic 220 pF ±5%
C305	142247065	Elect 47 μF 10V
C306	142247065	Elect 47 μF 10V
C307	150624241	Film 0.0024 μF ±5%
C308	150624241	Film 0.0024 μF ±5%
C309	150682241	Film 0.0082 μF ±5%
C310	150682241	Film 0.0082 μF ±5%
C311	142622965	Elect 2.2 μF 50V
C312	142622965	Elect 2.2 μF 50V
C313	142322065	Elect 22 μF 16V
C314	142322065	Elect 22 μF 16V
C315	175622395	Ceramic 0.022 μF +80% −20%
C401	142210165	Elect 100 μF 10V
C402	142247261	Elect 4700 μF 10V

REF. DESIG.	PARTS NO.	DESCRIPTION
C403	175610395	Ceramic 0.01 μF +80% −20%
C404	175610395	Ceramic 0.01 μF +80% −20%
C405	175610395	Ceramic 0.01 μF +80% −20%
C406	175610395	Ceramic 0.01 μF +80% −20%
C407	175610395	Ceramic 0.01 μF +80% −20%
C408	175610395	Ceramic 0.01 μF +80% −20%
C409	142347065	Elect 47 μF 16V
C410	142601065	Elect 1 μF 50V
C412	142522065	Elect 22 μF 35V
C413	188610145	Ceramic 100 pF ±5%
C414	175610395	Ceramic 0.01 μF +80% −20%
C415	180622045	Ceramic 22 pF ±5%
C416	180622045	Ceramic 22pF ±5%
C417	142601065	Elect 1 μF 50V
C418	142601065	Elect 1 μF 50V
C501	175610395	Ceramic 0.01 μF +80% −20%
C502	142347065	Elect 47 μF 16V
C503	175610395	Ceramic 0.01 μF +80% −20%
C504	175622395	Ceramic 0.022 μF +80% −20%
C505	175622395	Ceramic 0.022 μF +80% −20%
C506	142333065	Elect 33 μF 16V
C507	175622395	Ceramic 0.022 μF +80% −20%
C508	175622395	Ceramic 0.022 μF +80% −20%
C509	175610395	Ceramic 0.01 μF +80% −20%
C510	142633965	Elect 3.3 μF 50V
C514	171610255	Ceramic 0.001 μF ±10%
C515	150647341	Film 0.047 μF ±5%
C516	175622395	Ceramic 0.022 μF +80% −20%
C517	142610065	Elect 10 μF 50V
C518	142633965	Elect 3.3 μF 50V
C519	142647965	Elect 4.7 μF 50V
C520	175622395	Ceramic 0.022 μF +80% −20%
C521	175610395	Ceramic 0.01 μF +80% −20%
C522	142333065	Elect 33 μF 16V
C523	175622395	Ceramic 0.022 μF +80% −20%
C524	142347065	Elect 47 μF 16V
C525	175622395	Ceramic 0.022 μF +80% −20%
C526	180615045	Ceramic 15pF ±5%
C527	153643141	Styrol 430 pH ±5%
C528	175622395	Ceramic 0.022 μF +80% −20%
C529	175622395	Ceramic 0.022 μF +80% −20%
C530	175622395	Ceramic 0.022 μF +80% −20%
C531	142601065	Elect 1 μF 50V
C532	142601065	Elect 1 μF 50V
C601	142310165	Elect 100 μF 16V
C602	142601065	Elect 1 μF 50V
C603	142601065	Elect 1 μF 50V
C604	142633965	Elect 3.3 μF 50V
C605	142322165	Elect 220 μF 16V
C606	153610241	Styrol 1000 pF ±5%
C608	142601065	Elect 1 μF 50V
C609	150618341	Film 0.018 μF ±5%
C610	150618341	Film 0.018 μF ±5%
C611	171682155	Ceramic 820 pF ±10%
C612	171682155	Ceramic 820 pF ±10%
C613	142601065	Elect 1 μF 50V
C614	142601065	Elect 1 μF 50V
C701	171656155	Ceramic 560 pF ±10%
C702	150612341	Film 0.012 μF ±5%
C703	150633241	Film 0.0033 μF ±5%
C704	150612341	Film 0.012 μF ±5%
C705	150633241	Film 0.0033 μF ±5%
C706	150612341	Film 0.012 μF ±5%
C707	150633241	Film 0.0033 μF ±5%
C708	142510065	Elect 10 μF 35V
C709	142347065	Elect 47 μF 16V
C710	142601065	Elect 1 μF 50V
		P100 — RESISTORS (All Resistors are ±5% and ¼W)

www.hifiengine.com

REF. DESIG.	PARTS NO.	DESCRIPTION	
R1	111847325	47KΩ	1/8W
R2	111847125	47 Ω	1/8W
R3	111822125	220 Ω	1/8W
R4	111868225	6.8KΩ	1/8W
R5	111843225	4.3KΩ	1/8W
R6	111812325	12KΩ	1/8W
R7	111847325	47KΩ	1/8W
R8	111824125	820KΩ	1/8W
R9	111822125	220 Ω	1/8W
R10	111822125	220 Ω	1/8W
R11	111810125	100 Ω	1/8W
R12	111822125	220 Ω	1/8W
⚠ R102	113291123	910 Ω	2W
⚠ R103	113215223	1.5KΩ	2W
⚠ R104	113212223	1.2KΩ	2W
R105	111510121	100 Ω	1/2W
⚠ R106	113168123	680 Ω	1W
⚠ R107	113110023	10 Ω	1W
⚠ R108	113110023	10 Ω	1W
R109	111522221	2.2KΩ	1/2W
R110	111522221	2.2KΩ	1/2W
R111	111522221	2.2KΩ	1/2W
R112	111522221	2.2KΩ	1/2W
⚠ R115	112410021	10 Ω	
⚠ R116	112410021	10 Ω	
R117	111447325	47KΩ	
R118	111475325	75KΩ	
R120	111410325	10KΩ	
R121	111401025	1 Ω	
R122	111422225	2.2KΩ	
R123	111410125	100 Ω	
R124	111456325	56KΩ	
R125	111456325	56KΩ	
R126	111456325	56KΩ	
R127	111456325	56KΩ	
R128	111456125	560 Ω	
R129	111410325	10KΩ	
R130	111456125	560 Ω	
R131	111456125	560 Ω	
R132	111410225	1KΩ	
R133	111410225	1KΩ	
R134	111456125	260 Ω	
R301	111433125	330 Ω	
R302	111433125	330 Ω	
R303	11433125	330 Ω	
R304	111433125	330 Ω	
R305	114222225	2.2KΩ	
R306	111422225	2.2KΩ	
R307	111410425	100KΩ	
R308	111410425	100KΩ	
R309	111433125	330 Ω	
R310	111433125	330 Ω	
R311	111422225	2.2KΩ	
R312	111422225	2.2KΩ	
R313	111410425	100KΩ	
R314	111410425	100KΩ	
R315	111433125	330 Ω	
R316	111433125	330 Ω	
R317	111456425	560KΩ	
R318	11456425	560KΩ	
R319	111433125	330 Ω	
R320	111433125	330 Ω	
R321	111456325	56KΩ	
R322	111456325	56KΩ	
R323	111468125	680 Ω	
R324	111468125	680 Ω	
R325	111430325	30KΩ	
R326	111430325	30KΩ	
R327	111439425	390KΩ	

REF. DESIG.	PARTS NO.	DESCRIPTION	
R328	111439425	390KΩ	
R329	111422425	220KΩ	
R330	111422425	220KΩ	
R331	111422125	220 Ω	
R332	111422125	220 Ω	
⚠ R401	113118123	180 Ω	1W
R402	111447325	47KΩ	
R403	111447025	47 Ω	
R404	111410325	10KΩ	
R406	111433225	3.3KΩ	
R407	111410125	100 Ω	
R408	111410425	100KΩ	
R409	111427225	2.7KΩ	
R410	111427225	2.7KΩ	
R411	111410425	100KΩ	
R412	111410425	100KΩ	
R413	111410425	100KΩ	
R414	111410425	100KΩ	
R415	111451325	51KΩ	
R416	111451325	51KΩ	
R417	111433125	330 Ω	
R418	111433125	330 Ω	
R419	111433125	330 Ω	
R420	111410125	100 Ω	
R444	111482025	82 Ω	
R501	111422125	220 Ω	
R502	111456125	560 Ω	
R503	111410125	100 Ω	
R504	111412225	1.2KΩ	
R505	111427125	270 Ω	
R506	111433125	330 Ω	
R507	111447025	47 Ω	
R508	111422125	220 Ω	
R509	111482125	820 Ω	
R510	111410225	1KΩ	
R511	111447225	4.7KΩ	
R512	111422125	220 Ω	
R513	111433225	3.3K Ω	
R514	111415325	15KΩ	
R515	111482025	82 Ω	
R516	111410225	1KΩ	
R517	111415325	15KΩ	
R518	111410325	10KΩ	
R519	111410225	1KΩ	
R520	111447325	47KΩ	
R521	111410125	100 Ω	
R522	111447325	47KΩ	
R523	111447325	47KΩ	
R524	111410325	10KΩ	
R526	111422125	220 Ω	
R527	111422325	22KΩ	
R528	111447325	47KΩ	
R529	111410225	1KΩ	
R530	11482125	820 Ω	
R531	111447225	4.7KΩ	
R532	111410125	100 Ω	
R533	111447225	4.7KΩ	
R534	111447225	4.7KΩ	
R535	111447325	47KΩ	
R536	111447125	470 Ω	
R537	111410325	10KΩ	
R538	111422325	22KΩ	
R539	111447325	47KΩ	
R540	111433225	3.3KΩ	
R541	111433225	3.3KΩ	
R601	111462425	620KΩ	
R602	111410525	1MΩ	
R603	111422225	2.2KΩ	
R604	111447225	4.7KΩ	
R605	111410225	1KΩ	
R606	111491225	9.1KΩ	

www.hifiengine.com

REF. DESIG.	PARTS NO.	DESCRIPTION
R607	111410225	1KΩ
R608	111410425	100KΩ
R609	111468325	68KΩ
R610	111447225	4.7KΩ
R611	111447225	4.7KΩ
R612	111433225	3.3KΩ
R613	111433225	3.3KΩ
R701	111410425	100KΩ
R702	111410425	100KΩ
R703	111420325	20KΩ
R704	111415325	15KΩ
R706	111411325	11KΩ
R707	111410425	100KΩ
R708	111447325	47KΩ
R709	111447225	4.7KΩ
R710	111410325	10KΩ
R711	111418225	1.8KΩ
R712	111430225	3KΩ
R713	111411325	11KΩ
R714	111410325	10KΩ
R715	111410425	100KΩ
R716	111447325	47KΩ
R717	111447225	4.7KΩ
R718	111410325	10KΩ
R719	111418225	1.8KΩ
R720	111430225	3KΩ
R721	111411325	11KΩ
R722	111410325	10KΩ
R723	111410425	100KΩ
R724	111447325	47KΩ
R725	111447225	4.7KΩ
R726	111410325	10KΩ
R727	111418225	1.8KΩ
R728	111430225	3KΩ
R729	111422225	2.2KΩ
R730	111447325	47KΩ
R732	111410125	100 Ω
R733	111410325	10KΩ
VR501	NCP-035-0	47KΩ (B), Trimming
VR502	NCP-035-0	47KΩ (B), Trimming
VR601	NCP-016-0	5KΩ (B), Trimming
		P100–SEMICONDUCTORS
D1	1SV147	FM Varactor
D2	1SV147	FM Varactor
D3	1SV147	FM Varactor
⚠ D101	1N4002	Diode
⚠ D102	1N4002	Diode
⚠ D103	1N4002	Diode
⚠ D104	1N4002	Diode
⚠ D105	RS403L	Diode
⚠ D106	1N753A	Zener
⚠ D107	1N753A	Zener
⚠ D108	1N968B	Zener
D109	1N4148	Diode
D110	1N4148	Diode
⚠ D111	1N963B	Zener
⚠ D401	1N752A	Zener
D402	1N4148	Diode
D403	1N4148	Diode
D404	1N4148	Diode
D501	SVC321SP-D	AM Varactor
D502	SVC321SP-D	AM Varactor
D503	1N4148	Diode
D504	1N4148	Diode
D505	1N4148	Diode
D506	1N4148	Diode
D507	1N4148	Diode
D508	1N4148	Diode

REF. DESIG.	PARTS NO.	DESCRIPTION
D509	1N4148	Diode
D601	1N4148	Diode
Q1	2SK241	F.E.T (Y)
Q2	KTC1923	Transistor (O)
Q3	2SK161	F.E.T (Y)
Q4	2SK161	F.E.T (Y)
Q5	KTC1923	Transistor (O)
Q101	KTC1815	Transistor (GR/Y)
Q102	KTC1815	Transistor (GR/Y)
Q103	KTC1627	Transistor (Y)
Q401	2SK161	F.E.T (Y)
Q402	KTC2240	Transistor (GR)
Q403	KTC1815	Transistor (GR/Y)
Q501	KTC380	Transistor (Y/O)
Q502	KTA1015	Transistor (GR/Y)
Q503	KTC1815	Transistor (GR/Y)
Q504	KTC1815	Transistor (GR/Y)
Q505	KTC1815	Transistor (GR/Y)
Q506	KTA1015	Transistor (GR/Y)
Q507	KTC1815	Transistor (GR/Y)
Q508	KTA1015	Transistor (GR/Y)
Q509	KTC1815	Transistor (GR/Y)
Q510	KTC1815	Transistor (GR/Y)
Q601	KTC1815	Transistor (GR/Y)
⚠ IC101	UPC78M12	I.C
⚠ IC102	STK4182II	I.C
IC301	NJM4558S	I.C
IC401	TC9147-BP	I.C
IC402	TD6104-P	I.C
IC501	LA1265	I.C
IC601	KIA7343-AP	I.C
IC701	MC4558SN	I.C
IC702	MC4558SN	I.C
		P100–MISCELLANEOUS
L1	NTC-035-0	Antenna Coil, FM-A
L2	NTC-034-0	Antenna Coil, FM-B
L3	NTC-036-0	OSC Coil, FM
L4	NTH-050-0	Coil, 2.2μH
L5	NTH-050-0	Coil, 2.2μH
L101	NTH-043-0	Choke Coil, 1μH
L102	NTH-043-0	Choke Coil, 1μH
L501	NTH-030-0	Coil, 4.7mH
T1	NTC-037-0	RF Coil, FM
T2	NTE-012-0	IFT Coil, FM
T501	NTE-016-0	Coil, FM DET-A
T502	NTE-017-0	Coil, FM DET-B
T503	NTE-018-0	IFT Coil, AM
T504	NTB-043-0	Antenna Coil, AM
T505	NTB-035-0	OSC Coil, AM
CF501	NTF-017-A	Ceramic Filter, FM
CF502	NTF-017-A	Ceramic Filter, FM
CF503	NTF-028-0	Ceramic Filter, AM
CF504	NTF-029-0	Ceramic Filter, AM
TC501	NCM-006-0	Ceramic Trimmer
TC502	NCM-006-0	Ceramic Trimmer
FIL601	NTF-032-0	MPX Filter
FIL602	NTF-032-0	MPX Filter
TAL401	NSS-002-0	X-TAL OSC, 7.2MHz
⚠ RY101	NSR-107-0	Relay
S2	NSG-101-0	Push Switch
S3	NSG-100-0	Push Switch
S4	NSG-099-0	Push Switch
SW401	NSG-095-0	Tact Switch
SW402	NSG-095-0	Tact Switch
SW403	NSG-095-0	Tact Switch
SW404	NSG-095-0	Tact Switch
SW405	NSG-095-0	Tact Switch
SW406	NSG-095-0	Tact Switch

www.hifiengine.com

REF. DESIG.	PARTS NO.	DESCRIPTION
SW407	NSG-095-0	Tact Switch
SW408	NSG-095-0	Tact Switch
SW409	NSG-095-0	Tact Switch
SW410	NSG-095-0	Tact Switch
⚠F102	NEK-097-0	Fuse (1A, 125V)
J101	NKB-003-0	Pin Jack (4P)
J102	NKB-003-0	Pin Jack (4P)
J103	NKB-004-0	Pin Jack (6P)
J104	NKA-003-A	Terminal, Antenna
J105	NKE-013-0	Terminal (8P)
		P500—CONTROL CIRCUIT BOARD
P500	NNP-328-11	P.W. Board Control
	NWM-135-11	P.W. Board Assembly
		P500—CAPACITORS
C201	142622961	Elect 2.2 μF 50V
C202	142622961	Elect 2.2 μF 50V
C203	150618341	Film 0.018 μF ±5%
C204	150618341	Film 0.018 μF ±5%
C205	142668861	Elect 0.68 μF 50V
C206	142668861	Elect 0.68 μF 50V
C207	150610341	Film 0.01 μF ±5%
C208	150610341	Film 0.01 μF ±5%
C209	142622861	Elect 0.22 μF 50V
C210	142622861	Elect 0.22 μF 50V
C211	150682241	Film 0.0082 μF ±5%
C212	150682241	Film 0.0082 μF ±5%
C213	150682341	Film 0.082 μF ±5%
C214	150682341	Film 0.082 μF ±5%
C215	150647241	Film 0.0047 μF ±5%
C216	150647241	Film 0.0047 μF ±5%
C217	150633341	Film 0.033 μF ±5%
C218	150633341	Film 0.033 μF ±5%
C219	150622241	Film 0.0022 μF ±5%
C220	150622241	Film 0.0022 μF ±5%
C221	150612341	Film 0.012 μF ±5%
C222	150612341	Film 0.012 μF ±5%
C223	150612241	Film 0.0012 μF ±5%
C224	150612241	Film 0.0012 μF ±5%
C225	150647241	Film 0.0047 μF ±5%
C226	150647241	Film 0.0047 μF ±5%
C227	171668151	Ceramic 680 pF ±10%
C228	171668151	Ceramic 680 pF ±10%
C229	142347061	Elect 47 μF 16V
C230	142347061	Elect 47 μF 16V
C231	142347061	Elect 47 μF 16V
C232	142347061	Elect 47 μF 16V
C233	188633141	Ceramic 330 pF ±5%
C234	188633141	Ceramic 330 pF ±5%
C235	142647961	Elect 4.7 μF 50V
C236	142647961	Elect 4.7 μF 50V
C237	188610041	Ceramic 10 pF ±5%
C238	188610041	Ceramic 10 pF ±5%
C239	142510061	Elect 10 μF 35V
C240	142510061	Elect 10 μF 35V
C241	188610141	Ceramic 100 μF ±5%
C242	188610141	Ceramic 100 μF ±5%
C243	142647961	Elect 4.7 μF 50V
C244	142647961	Elect 4.7 μF 50V
C245	142647961	Elect 4.7 μF 50V
C246	142647961	Elect 4.7 μF 50V
C247	142347061	Elect 47 μF 16V
C248	142347061	Elect 47 μF 16V
C249	188639141	Ceramic 390 μF ±5%
C250	188639141	Ceramic 390 μF ±5%
C251	142622961	Elect 2.2 μF 50V

REF. DESIG.	PARTS NO.	DESCRIPTION
C252	142622961	Elect 2.2 μF 50V
C253	188668041	Ceramic 68 pF ±5%
C254	188668041	Ceramic 68 pF ±5%
C261	142647961	Elect 4.7 μF 50V
C419	175610391	Ceramic 0.01 μF +80% −20%
C420	175610391	Ceramic 0.01 μF +80% −20%
C421	142247061	Elect 47 μF 10V
C422	175647391	Ceramic 0.047 μF +80% −20%
C424	175647391	Ceramic 0.047 μF +80% −20%
C425	175647391	Ceramic 0.047 μF +80% −20%
C426	175647391	Ceramic 0.047 μF +80% −20%
C427	142522061	Elect 22 μF 35V
C711	142247061	Elect 47 μF 10V
		P500—RESISTORS (All Resistors are ±5% and ¼W)
R201	111839125	390 Ω 1/8W
R202	111839125	390 Ω 1/8W
R203	111839125	390 Ω 1/8W
R204	111839125	390 Ω 1/8W
R205	111839125	390 Ω 1/8W
R206	111839125	390 Ω 1/8W
R207	111839125	390 Ω 1/8W
R208	111839125	390 Ω 1/8W
R209	111839125	390 Ω 1/8W
R210	111839125	390 Ω 1/8W
R211	111839125	390 Ω 1/8W
R212	111839125	390 Ω 1/8W
R213	111839125	390 Ω 1/8W
R214	111839125	390 Ω 1/8W
R215	111856225	5.6K Ω 1/8W
R216	111856225	5.6K Ω 1/8W
R217	111856225	5.6K Ω 1/8W
R218	111856225	5.6K Ω 1/8W
R219	111856225	5.6K Ω 1/8W
R220	111856225	5.6K Ω 1/8W
R221	111856225	5.6KΩ 1/8W
R222	111856225	5.6K Ω 1/8W
R223	111856225	5.6K Ω 1/8W
R224	111856225	5.6K Ω 1/8W
R225	111856225	5.6K Ω 1/8W
R226	111856225	5.6K Ω 1/8W
R227	111856225	5.6K Ω 1/8W
R228	111856225	5.6K Ω 1/8W
R229	111812225	1.2K Ω 1/8W
R230	111815225	1.5K Ω 1/8W
R231	111815225	1.5K Ω 1/8W
R232	111815225	1.5K Ω 1/8W
R233	111815225	1.5K Ω 1/8W
R234	111815225	1.5K Ω 1/8W
R235	111815225	1.5K Ω 1/8W
R236	111812225	1.2K Ω 1/8W
R237	111815225	1.5K Ω 1/8W
R238	111815225	1.5K Ω 1/8W
R239	111815225	1.5K Ω 1/8W
R240	111815225	1.5K Ω 1/8W
R241	111815225	1.5K Ω 1/8W
R242	111815225	1.5K Ω 1/8W
R243	111815425	150K Ω 1/8W
R244	111810425	100K Ω 1/8W
R245	111856325	56K Ω 1/8W
R246	111839325	39K Ω 1/8W
R247	111836325	36K Ω 1/8W
R248	111827325	27K Ω 1/8W

www.hifiengine.com

REF. DESIG.	PARTS NO.	DESCRIPTION
R249	111822325	22KΩ 1/8W
R250	111815425	150KΩ 1/8W
R251	111810425	100KΩ 1/8W
R252	111856325	56KΩ 1/8W
R253	111839325	39KΩ 1/8W
R254	111836325	36KΩ 1/8W
R255	111827325	27KΩ 1/8W
R256	111822325	22KΩ 1/8W
R257	111447025	47 Ω
R258	111447025	47 Ω
R259	111410125	100 Ω
R260	111410125	100 Ω
R261	111847225	4.7KΩ 1/8W
R262	111847225	4.7KΩ 1/8W
R263	111847225	4.7KΩ 1/8W
R264	111847225	4.7KΩ 1/8W
R265	111827225	2.7KΩ 1/8W
R266	111827225	2.7KΩ 1/8W
R267	111833225	3.3KΩ 1/8W
R268	111833225	3.3KΩ 1/8W
R269	111827325	27KΩ 1/8W
R270	111827325	27KΩ 1/8W
R271	111410225	1KΩ
R272	111410225	1KΩ
R273	111410225	1KΩ
R274	111410225	1KΩ
R275	111447025	47 Ω
R276	111447025	47 Ω
R277	111422225	2.2KΩ
R278	111422225	2.2KΩ
R279	111410225	1KΩ
R280	111410225	1KΩ
R281	111436325	36KΩ
R282	111436325	36KΩ
R283	111415425	150KΩ
R284	111415425	150KΩ
R421	111422125	220 Ω
R422	111422125	220 Ω
R423	111422125	220 Ω
R424	111422325	22KΩ
R425	111447325	47KΩ
R426	111447325	47KΩ
R427	111447325	47KΩ
R428	111447325	47KΩ
R429	111447325	47KΩ
R430	111447325	47KΩ
R431	111447325	47KΩ
R432	111447325	47KΩ
R433	111447325	47KΩ
R434	111447325	47KΩ
R435	111447325	47KΩ
R436	111447325	47KΩ
R437	111447325	47KΩ
R438	111447325	47KΩ
R439	111410125	100 Ω
R440	111433125	330 Ω
R441	111433125	330 Ω
R442	111412225	1.2KΩ
R443	111410225	1KΩ
R444	111410225	1KΩ
R445	111422125	220 Ω
R446	111415225	1.5KΩ
R447	111410225	1KΩ
R448	111422225	2.2KΩ
R731	111468125	680 Ω
VR201	NCW-031-0	250KΩ (B), Trimming
VR202	NCW-031-0	250KΩ (B), Trimming
VR203	NCW-031-0	250KΩ (B), Trimming
VR204	NCW-031-0	250KΩ (B), Trimming
VR205	NCW-031-0	250KΩ (B), Trimming
VR206	NCW-031-0	250KΩ (B), Trimming
VR207	NCW-031-0	250KΩ (B), Trimming

REF. DESIG.	PARTS NO.	DESCRIPTION
VR208	NCW-027-0	200KΩ (W), Trimming
VR209	NCW-028-A	100KΩ (A), Trimming
		P500-SEMICONDUCTORS
⚠ D405	1N747A	Zener
D406	SLR54GC	L.E.D (Green)
D407	SLR54GC	L.E.D (Green)
D408	SLR54GC	L.E.D (Green)
D409	SLR54GC	L.E.D (Green)
D410	SLR54VRC	L.E.D (Red)
⚠ D710	1N753A	Zener
Q201	KTC1815	Transistor (GR/Y)
Q202	KTC1815	Transistor (GR/Y)
Q203	KTC1815	Transistor (GR/Y)
Q204	KTC1815	Transistor (GR/Y)
Q205	KTC1815	Transistor (GR/Y)
Q206	KTC1815	Transistor (GR/Y)
Q207	KTC1815	Transistor (GR/Y)
Q208	KTC1815	Transistor (GR/Y)
Q209	KTC1815	Transistor (GR/Y)
Q210	KTC1815	Transistor (GR/Y)
Q211	KTC1815	Transistor (GR/Y)
Q212	KTC1815	Transistor (GR/Y)
Q213	KTC1815	Transistor (GR/Y)
Q214	KTC1815	Transistor (GR/Y)
Q215	KTC1815	Transistor (GR/Y)
Q216	KTC1815	Transistor (GR/Y)
Q404	KTA1015	Transistor (GR/Y)
Q405	KTA1015	Transistor (GR/Y)
IC201	MC4558SN	I.C
IC403	TC9158P	I.C
		P500–MISCELLANEOUS
FLT401	NEL-028-0	F.L.T
S411	NSG-096-B	Tact Switch
S412	NSG-096-B	Tact Switch
S413	NSG-096-B	Tact Switch
WA1	NKP-034-0	Connector (9P)
WA2	NKP-032-0	Connector (7P)
WA3	NKP-031-0	Connector (6P)
WA4	NKP-032-0	Connector (7P)
		P501–VIDEO CIRCUIT BOARD
P501	NNP-328-21	P.W. Board Video
	NWM-135-21	P.W. Board Assembly
		P501–CAPACITORS
C801	142347061	Elect 47μF 16V
C802	142347061	Elect 47μF 16V
C803	142247161	Elect 470μF 10V
C804	142247161	Elect 470μF 10V
C805	188633041	Ceramic 33pF ±5%
C806	142247161	Elect 470μF 10V
C807	142347061	Elect 47μF 16V
C808	175647391	Ceramic 0.047μF +80% –20%
C809	175647391	Ceramic 0.047μF +80% –20%
C810	142310161	Elect 100μF 16V
C811	175647391	Ceramic 0.047μF +80% –20%
C812	142347061	Elect 47μF 16V
		P501–RESISTORS (All Resistors are ±5% and ¼W)
R801	111475025	75 Ω

www.hifiengine.com

REF. DESIG.	PARTS NO.	DESCRIPTION
R802	111475025	75 Ω
R803	111410325	10KΩ
R804	111468025	68 Ω
R805	111410325	10KΩ
R806	111447225	4.7KΩ
R807	111447225	4.7KΩ
R808	111447225	4.7KΩ
R809	111410425	100KΩ
R810	111410425	100KΩ
R811	111447225	4.7KΩ
R812	111447225	4.7KΩ
R813	111410125	100 Ω
R814	111422125	220 Ω
R815	111410125	100 Ω
R816	111415225	1.5KΩ
R817	111447125	470 Ω
R818	111422225	2.2KΩ
R819	111433225	3.3KΩ
R820	111415225	1.5KΩ
R821	111410225	1KΩ
R822	111410125	100 Ω
R823	111447125	470 Ω
R824	111447025	47 Ω
R325	111468025	68 Ω
		P501—SEMICONDUCTORS
IC801	MC14066	I.C
Q801	KTC1815	Transistor (GR/Y)
Q802	KTC1815	Transistor (GR/Y)
Q803	KTC1815	Transistor (GR/Y)
Q804	KTC1815	Transistor (GR/Y)
D801	1N4148	Diode
		P501—MISCELLANEOUS
L801	NTH-059-B	Choke Coil, 100μH
WA7	NKP-030-0	Connector (5P)
J501	NKB-007-A	Pin Jack (4P Video)
		P502-POWER SWITCH CIRCUIT BOARD
P502	NNP-328-31	P.W. Board Power Switch
	NWM-135-31	P.W. Board Assembly
⚠ C101	NCG-003-0	Ceramic 0.01μF 125V
⚠ SW101	NSG-108-A	Puch Switch (Power)
⚠ F101	NEK-093-0	Fuse (2.5A, 125V)
		P503—SPEAKER SELECTOR CIRCUIT BOARD
P503	NNP-328-41	P.W. Board Speaker Selector
	NWM-135-41	P.W. Board Assembly
R113	113133123	330 Ω 1W ±5%
R114	113133123	330 Ω 1W ±5%
SW1	NSG-098-A	Push Switch
JA101	NKN-033-0	Jack (Phone)
WA5	NKP-029-0	Connector (4P)
WA5	NKP-031-0	Connector (6P)

www.hifiengine.com

8. TECHNICAL SPECIFICATIONS

AMPLIFIER SECTION:

Rated Power Output, Minimum Continuous Watts per channel from 40Hz to 20kHz, both channels driven
- Into 8 ohms 45W

Total Harmonic Distortion
- Into 8 ohms 0.3%

I.M. Distortion
- at 8 ohms 0.09%

Damping Factor 42

Phono
- Input Overload at 1kHz 115mV
- Input Sensitivity (Input Impedance, 47 kohms) 2.5mV
- Frequency Response (RIAA 20Hz to 20kHz) ..... ± 1.5dB
- Signal to Noise Ratio (IHF) 73dB

CD, AUX, VIDEO1, VIDEO2
- Input Sensitivity (AUX, VIDEO 1, VIDEO 2) 150mV
- Input Sensitivity (CD) 150mV
- Frequency Response (15Hz-45kHz) ..... ± 1dB
- Signal to Noise Ratio (IHF) 92dB

FM TUNER SECTION:

Sensitivity
- IHF Usable 12.1dBf
- IHF 50dB Quieting
  - (Mono) 16.8dBf
  - (Stereo) 39.2dBf

Signal to Noise Ratio at 65dBf (98MHz)
- (Mono) 72dB
- (Stereo) 67dB

Distortion (Mono) at 65dBf
- 100Hz 0.25%
- 1000Hz 0.2%
- 6kHz 0.4%

Distortion (stereo) at 65dBf
- 100Hz 0.45%
- 1000Hz 0.3%
- 6kHz 0.6%

Stereo Separation
- 100Hz 28dB
- 1000Hz 40dB
- 10kHz 25dB

Capture Ratio at 98MHz 1.5dB

Frequency Response
- 40Hz to 15KHz Mono and Stereo ..... ± 1.5dB

Alternate Channel Selectivity 50dB

Spurious Respence Rejection 65dB

Image Response Rejection 47dB

I.F. Rejection (Balanced) 80dB

A.M. Suppression 50dB

Subcarrier Rejection 30dB

www.hifiengine.com

AM TUNER SECTION:

IHF Usable Sensitivity	300uV/m
Signal to Noise Ratio	45dB
Alternate Channel selectivity	25dB
Image Rejection	40dB
Spurious Response Rejection	30dB
I.F. Rejection	60dB

VIDEO SECTION:

Input (Sensitivity/Impedance)

VIDEO 1, VIDEO 2	1Vp-P/75Ω unbalanced

Output (Level/Impedance)

VIDEO1, MONITOR TV	1Vp—P/75Ω unbalanced

GENERAL:

Power Requirements	120V AC, 60Hz
Power Consumption at rated output, both channels operating	180W
Idling power (Volume Control at minimum)	20W

Dimensions

Panel Width	420mm (16.5 inches)
Panel Height	93mm (3.66 inches)
Depth	256mm (10 inches)

Weight

Unit alone	5.4kg (11.4lbs)
Packed for Shipment	6.4kg (14.1lbs)

Specifications and apperance are subject to change for modification without notice.

www.hifiengine.com

SECTION' AMPLIFICATION DE PUISSANCE:

Puissance de sroite nominale, Puissance minimum Continue Par canal, 40Hz-20 kHz, less deux canaux entrainès
en 8 ohms 45W

Distorsion harmonique total
en 8 ohms 0.3%

Distorsion d'intermodulation
à 8 ohms 0.09%

Facteur d'amatissenent 42

Phono
Surcharge d-éntrée (1 kHz) 115mV
Sensibilite (d'entrée Impédance d'entrée, 47 k ohms) 2.5mV
Réponse en fréquences, RIAA 20Hz à 20 kHz ..... ± 1.5dB
Rapport signal/bruit (IHF) 73dB

CD, AUX, VIDEO1, VIDEO2
Sensibilité d'entrée (AUX, VIDEO 1, VIDEO 2) 150mV
Sensibilité d'entrée (CD) 150mV
Réponse en fréquences (15Hz-45KHz) ..... ± 1dB
Rapport signal/bruit (IHF) 92dB

SECITION TUNER FM:

Sensibilite
Sensibilité d'usage (IHF) 12.1dBf

Sensibilite pour un rapport signal/bruit de 50dB
(Mono) 16.8dBf
(Stereo) 39.2dBf

Rapport signal/bruit à 65dBf (98MHz)
(Mono) 72dB
(Stereo) 67dB

Distorsion (Mono) à 65dBf
100Hz 0.25%
1000Hz 0.2%
6 kHz 0.4%

Distorsion (Stéreó) a 65dBf
100Hz 0.45%
1000Hz 0.3%
6 kHz 0.6%

Séparation stéreó
100Hz 28dB
1000Hz 40dB
10 kHz 25dB

Rapport de Capture à 98 MHz 1.5dB

Reponse en fréquences
40Hz à 15 kHz Mono et Stéreó ..... ± 1.5dB

Sélectivité (porteuse alternative) 50dB
Elimination des parasites 65dB
Réjection d'image 47dB
Réjection IF 80dB
Suppression AM 50dB
Réjection de la sous-porteuse 30dB

www.hifiengine.com

SECTION TUNER AM:

Sensibilité d'usage 300uV/m
Rapport signal/bruit 45dB
Sélectivité (Porteuse alternative) 25dB
Réjection d'image 40dB
Réjection des parasites 30dB
Rejection d'IF 60dB

SECTION VIDEO:

Sensibilité dentrée/Impédance)
VIDEO1, VIDEO 2 ..... 1Vp–P/75Ω
Niveau de sortie/Impédance
VIDEO 1, MONITOR TV 1Vp–P/75Ω

GENERALITES:

Source d'alimentation 120V AC.60Hz
Consommation avec 2 canaux à pleine charge 180W
Puissance réactive (réglage de puissance á minimum) 20W

Dimensions
Largeur du penneau 420mm
Hauteur du panneau 93mm
Profondeur 256mm

Poids
Poids net ..... 5.4 Kg
Poids bruit (avec enballage) ..... 6.4 Kg

www.hifiengine.com

MEMO

www.hifiengine.com

9. SCHEMATIC DIAGRAM

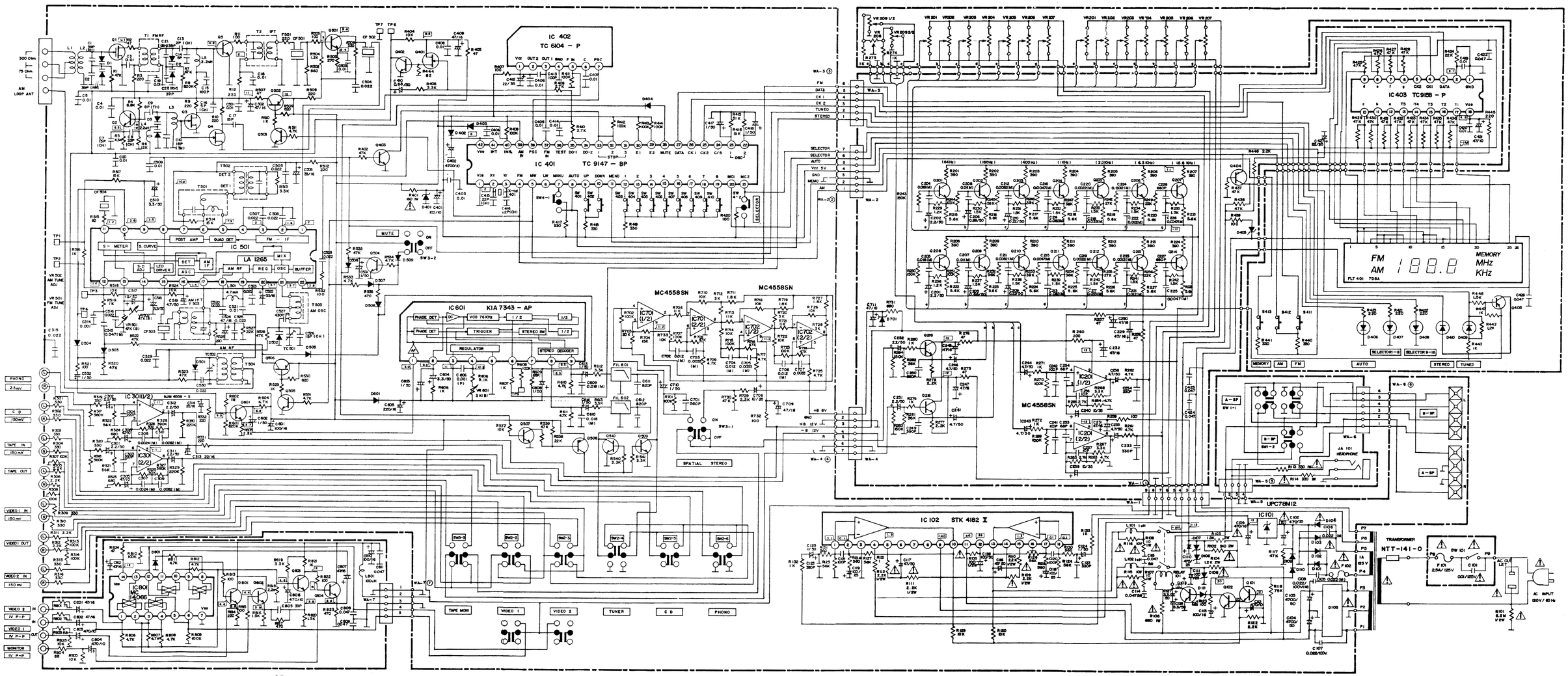

SYMBOL NO	DISCRIPTION/ USE
Q501 – Q504 Q601 – Q602	TRANSISTOR KTC 1815 – GR/Y
Q201 – Q216 Q403, Q603 Q504, Q505 Q507, Q509 Q510	
Q404, Q502 Q508, Q508 Q401	TRANSISTOR KTA 1015 – GR/Y
Q2, Q5	TRANSISTOR KTC 1923 – O
Q103	TRANSISTOR KTC 1627 – Y
Q501	TRANSISTOR KTC 380 – O
Q 402	TRANSISTOR KTC 2240 – GR
Q 1	FET 2SK 241 – Y
Q3, Q4 Q401	FET 2SK – 161 – Y
D501, D502	DIODE VARACTOR SVC – 321 – BP
D1, D2, D3	DIODE VARACTOR ISV – 147
D401	DIODE ZENER IN 752 A
D106, D107 D701	DIODE ZENER IN 753 A
D108	DIODE ZENER IN 968 B
D111	DIODE ZENER IN 963 B
D405	DIODE ZENER IN 747 A
D101, D102 D103, D104	DIODE IN 4002

SYMBOL NO	DISCRIPTION/ USE
D105	DIODE BRIDGE
D109, D110 D402, D403 D404, D503 D504, D505 D506, D507 D508, D509 D601, D801	DIODE SWITCHING IN 4148
D406, D407 D408, D409	DIODE L. E. D SLR 34 SC
D410	DIODE L. E. D SLR 34 VRC
L 1	COIL FM ANT (A)
L 2	COIL FM ANT (B)
L 3	COIL FM OSC
L4, L5	COIL INDUCTOR 2.2 uH
L101, L102	COIL INDUCTOR 1 uH
L 801	COIL INDUCTOR 100uH
T 1	COIL FM RF
T2	COIL FM IFT
T501	COIL FM DET (A)
T 502	COIL FM DET (B)
T 503	COIL AM IFT

SYMBOL NO	DISCRIPTION/ USE
T 504	COIL AM ANT
T505	COIL AM OSC
CF 501, CF 502	FILTER CERAMIC SFE 10.7 MA 8 HA
CF 503	FILTER CERAMIC SFU 450 B
CF 504	FILTER CERAMIC BFU 450 C4N
FIL 601 FIL 602	FILTER MPX
X – 1 ni 401	X – ni OSC 7.2 MHz
SW 1	SWITCH POWER
SW 2	SWITCH FUNCTION
SW 3	SWITCH SPATIAL / MUTE / MONITOR
SW 4	SWITCH TUNING MANUAL / AUTO

External Appearance of Transistor and IC

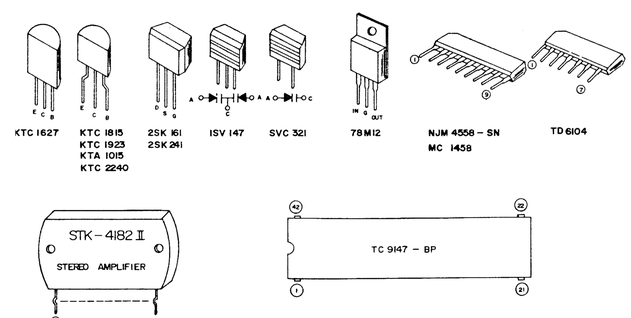

marantz®

MARANTZ COMPANY, INC. 20525 NORDHOFF ST., CHATSWORTH, CALIFORNIA 91311

Printed in Korea

NRT-005-0

www.hifiengine.com